Towong Bridge Replacement

Review of Environmental Factors

Transport for NSW

Towong Bridge Replacement

Review of Environmental Factors

Transport for NSW | August 2021

Prepared by Cardno (NSW/ACT) Pty Ltd and Transport for NSW

21.043

ISBN: 978-1-922463-69-2

Copyright: The concepts and information contained in this document are the property of Transport for NSW. Use or copying of this document in whole or in part without the written permission of Transport for NSW constitutes an infringement of copyright.

Document controls

Approval and authorisation

Title	Towong Bridge Replacement review of environmental factors
Accepted on behalf of Transport for NSW by:	
Signed:	
Dated:	

Document status

Document status	Date	Prepared by	Reviewed by
Rev A – draft REF	7 May 2021	Kiera Plumridge	Cassy Baxter
Rev B – updated REF	7 July 2021	Kiera Plumridge and Kyle Johannes	Cassy Baxter
Rev C – updated REF	20 August 2021	Kyle Johannes	Cassy Baxter
Rev D – updated REF	27 August 2021	Kyle Johannes	Cassy Baxter

Executive summary

The proposal

Towong Bridge over the Murray River was constructed in 1938, and links Brooke Street in Towong, Victoria to Towong Road in Bringenbrong, NSW. It is currently the only timber beam bridge crossing of the Murray River.

The existing bridge is located in a rural environment within a scenic section of the Murray River and is listed on *Tumbarumba Local Environmental Plan 2010* (Tumbarumba LEP) as an item of local heritage significance.

The proposal outlined herein is to replace the existing bridge with a new bridge on the same alignment to provide a safe new river crossing, offering an equivalent or better standard of service than existing.

Key features of the proposal would include:

- a 58-metre, three-span bridge structure crossing the Murray River on the existing alignment
- five super-T girders in each span
- reinforced concrete headstocks
- bridge traffic barriers
- 1.95-metre-wide walkway; and
- demolition of the existing bridge.

Need for the proposal

Towong Bridge was ranked as number six in the list of short-term priorities for investment within the Murray River Crossings Investment Priority Assessment (IPA) (RMS and VicRoads, 2018). The IPA identified that the Towong Bridge does not provide a minimum standard of structure condition due to its poor condition as a result of age and therefore needs to be replaced.

The proposal entails the replacement of the existing bridge with a new bridge on the same alignment to provide a safe new river crossing, offering an equivalent or better standard of service than the existing bridge.

Proposal objectives

The proposal objectives are to:

- provide a modern structure with minimal maintenance for the next 25 years
- ensure a safe crossing for all users by addressing bridge safety concerns
- ensure the bridge is capable of withstanding current and future traffic loads.

Options considered

Various bridge replacement options were considered for the bridge during the earlier concept design phase (completed by SMEC as part of the *Replacement of Towong Bridge over the Murray River (B5947) Concept Design Report* (2020).

Initial options considered were:

- option 1 – timber bridge ‘like for like’ replacement, using the existing alignment
- option 2 – super-T girders, using the existing alignment
- option 3 – spaced plank, using the existing alignment

- option 4 – steel girders, using the existing alignment.

Three improved alignment options were then considered which would not require the existing bridge to be closed during construction, and therefore requiring less traffic management.

Improved alignment options considered were:

- option 5 - super-T girders, using an alternative alignment
- option 6 - space planks, using an alternative alignment
- option 7 - super-T girders, using the existing alignment.

A multi-criterion analysis (MCA) was then completed by SMEC (2020) to assess each option based on set criterion with various weightings.

For all options considered, two lanes (one lane in each direction) were considered essential to ensure the future traffic demands for this road network would be met and to provide some redundancy on the Victorian side for any large vehicle movements around the T-junction. A footpath across the bridge was also considered beneficial to provide pedestrian access to a camping ground located next to the bridge on the NSW side. A jetty is available for public access on the Victorian side, downstream of the bridge.

The MCA identified option 7 as the preferred option which is now being assessed in this review of environmental factors (REF) as the 'proposal'.

Statutory and planning framework

The project is to be delivered under the Border Bridge Maintenance Program which is jointly funded between Transport for NSW and Rural Roads Victoria (RRV).

The basis of applying NSW legislation during impact assessment within a REF is founded on the New South Wales (NSW)/Victoria (Vic) State border being located on the high water mark of the Victorian side of the Murray River, where the majority of works are located. Relatively minor works are also located within the Victorian jurisdiction (contained within the highly disturbed road corridor and flood scoured embankment).

Nonetheless, this REF provides the statutory and planning framework for the proposal for both NSW and Victorian jurisdictions.

In summary, with respect to the minor works within the Victorian side of the bank, the potential for environmental, heritage and socio-economic impacts is considered to be low, and as such, assessment under the *Environment Effects Act 1978* (Vic) is not required. Accordingly, assessment under the *Planning and Environment Act 1987* (Vic) is the primary environmental and planning instrument that applies to the project. The potential requirement for regulatory approvals associated with Victorian legislation and policies would be finalised during the consultation strategy, principally with Towong Shire Council, with all requisite approvals to be acquired prior to the works commencing.

This REF also details the legislative framework for the majority of the works located within the State of NSW. Under *State Environmental Planning Policy (infrastructure) 2007* (ISEPP), the proposed facility is 'road infrastructure'. The proposal is for a bridge replacement and is to be carried out by Transport for NSW and can therefore be assessed under Division 5.1 of the *Environmental Planning and Assessment Act 1979* (EP&A Act). The proposal is categorised as development for the purpose of a bridge and is being carried out by or on behalf of a public authority. Under clause 94 of ISEPP the proposal is permissible without consent.

Accordingly, Transport is the determining authority for the proposal in NSW. This REF fulfils Transport's obligation under Section 5.5 of the EP&A Act including to examine and take into account to the fullest extent possible all matters affecting or likely to affect the environment by reason of the activity.

Community and stakeholder consultation

Consultation with the following agencies has been carried out during the preparation of this REF:

- Snowy Valleys Council
- Towong Shire Council
- Department of Primary Industries (DPI) – Fisheries (Fisheries)
- Department Planning, Industry and Environment – Crown Land (Crown Land)
- Natural Resources Access Regulator (NRAR)
- Snowy Hydro
- NSW Environment Protection Authority (EPA)
- WaterNSW
- Murray–Darling Basin Authority (MDBA)
- VicRoads (now Department of Transport)
- Department of Environment, Land, Water and Planning (DELWP) - Heritage
- North East Catchment Management Authority (NECMA).

These government agencies and stakeholders were contacted via letter on 31 March 2021 and feedback was received from seven of the 12 agencies at the time of writing.

A consultation strategy is currently being prepared by Transport for NSW for ongoing consultation as part of the proposal.

Environment impacts

The main environmental impacts of the proposal and the safeguards and management measures to address the impacts are summarised below and discussed in detail in Section 6. All other environmental impacts are considered minor or negligible and documented in Section 6 of this REF.

Biodiversity

An impact assessment was prepared in accordance with Environmental Impact Assessment Practice Note: Biodiversity Assessment (EIA-N06) (RMS, 2016b).

There would be a minor and temporary impact to Key Fish Habitat (KFH) due to the proposal. Although some wood debris may be removed from the river during bridge demolition and construction, this would be a very small proportion of that present in the river. This wood debris could also be placed back into the river upstream or downstream along with additional wood debris due to any required tree removal. Thus, significant impacts to KFH are not expected.

The proposal is not expected to significantly impact threatened species or ecological communities or their habitats, within the meaning of the *Environment Protection and Biodiversity Conservation Act 1999* (EPBC Act) or *Fisheries Management Act 1994* (FM Act) and therefore a Species Impact Statement or Biodiversity Development Assessment Report is not required.

No key threatening processes listed under the FM Act, *Biodiversity Conservation Act 2016 (*BC Act) and/or EPBC Act would be exacerbated by the proposal.

Vegetation removal within Victoria as a result of this proposal is limited to exotics including grasses. Given the limited impact of the proposal within Victoria it is considered that no further investigations or permits are required for the vegetation removal associated with the proposal.

Heritage

Non-Aboriginal

A Statement of Heritage Impact (SoHI) was prepared by Austral Archaeology (Austral, 2021) to support the proposal.

The study area is listed as a heritage item on the Tumbarumba Local Environmental Plan (LEP) as 'Towong Bridge over Murray River' (Item No. I21) and under section 170 on the Roads and Maritime Heritage Conservation Register as 'RTA Bridge No. 5947'.

The SoHI recognises the existing Towong Bridge as of local historical significance as it represents a major piece of road infrastructure on an important local transport route.

While Towong Bridge is considered to meet Heritage Significant criteria on a local level, the bridge piers and supports are in poor structural condition. The timber structure of the bridge is generally significantly deteriorated, particularly the piers, which are severely decayed. As a result, the bridge is no longer suitable to be retained and is considered a potential safety risk.

Following a review of the historical background of the study area and the proximity of the study area to the level of the river, the SoHI determined that no historical archaeological remains are likely to occur in the area of work.

The SoHI concluded the proposal is considered consistent with requirements to improve bridge safety and is acceptable from a heritage standpoint (Austral, 2021).

Aboriginal

An Aboriginal Desktop Risk Assessment (ADRA) was prepared by Austral Archaeology (Austral, 2021a) to support the proposal and is in accordance with Stage 1 of the Roads and Maritime Services Procedure for Aboriginal Cultural Heritage Consultation and Investigation (PACHCI) (RMS, 2011).

The ADRA assessed the proposed work as being unlikely to have an impact on Aboriginal cultural heritage.

The assessment is based on the following considerations:

- the Aboriginal Heritage Information Management System (AHIMS) search indicated three known Aboriginal archaeological sites within 10 kilometres of the proposal but no sites within the immediate study area
- the study area shows limited potential for Aboriginal cultural material to be present within the study area
- the Aboriginal cultural heritage potential of the study area appears to be severely reduced due to past disturbance from flooding and erosion.

The presence of frequently scoured floodplains and the construction and ongoing use of the bridge are likely to have caused significant levels of disturbance which would have removed all evidence of Aboriginal cultural material from within the study area. The proposed work is unlikely to result in harm to Aboriginal objects and sites, as the work is limited to the existing bridge site and along previously disturbed landform as a result of flooding and erosion which have reduced the potential for Aboriginal cultural material in the vicinity.

The ADRA completed for the proposal concluded the proposal was unlikely to have an impact on Aboriginal cultural heritage within NSW and did not require further investigations or assessment within the NSW component of the study area (Austral, 2021a).

Given the above, it is considered that works within the Victorian boundary is unlikely to impact on Aboriginal cultural heritage. The proposed works are considered exempt under Regulation15(2) of the *Aboriginal Heritage Regulations 2018* as they consist of works on, over or under an existing roadway, and under Regulation15(2)(b) considered maintenance or repair works associated with an existing high impact activity and therefore no further investigation is required.

Justification and conclusion

The proposal would be unlikely to cause a significant impact on the environment. Therefore, it is not necessary for an Environmental Impact Statement to be prepared and approval to be sought from the Minister for Planning and Public Spaces under Division 5.2 of the EP&A Act. A Biodiversity Development Assessment Report or Species Impact Statement is not required. The proposal is subject to assessment under Division 5.1 of the EP&A Act. Consent from Snowy Valleys Council is not required.

With respect to the relatively minor works within the State of Victoria, under the Victorian *Roads Management Act 2004*, Schedule 7 and the Roads Management (Works and Infrastructure) Regulations 2005, a work within roadway consent is needed from Towong Shire Council to occupy and close Towong Hill Road to allow for work and to allow for the potential establishment of the site compound on the Victoria side of the bridge. Towong Shire Council would be consulted to confirm the consent requirements within Victoria as per the project communications plan currently under preparation. Following consultation with Towong Shire Council (and State agencies, if required), all requisite approvals would be obtained prior to any works commencing within the Victorian jurisdiction.

The project is to be delivered under the Border Bridge Maintenance Program which is jointly funded between Transport and Rural Roads Victoria (RRV).

Display of the review of environmental factors

This REF is on display for comment between Monday 30 August and Friday 24 September 2021. You can access the documents in the following ways:

Internet

The documents are available as pdf files on the Transport website at nswroads.work/towong.

Copies by request

Printed and electronic copies are available by calling 1300 679 842 .

How can I make a submission?

To make a submission about this proposal, please send your written comments to:

Email: murrayrivercrossing@transport.nsw.gov.au

Mail: Towong Bridge replacement project team, PO Box 484, Wagga Wagga, NSW, 2650.

Submissions must be received by midnight Friday 24 September 2021. Submissions will be managed in accordance with the Transport Privacy Statement which can be found at www.transport.nsw.gov.au/privacy-statement.

What happens next?

Transport will collect and consider submissions received during the REF public display.

After this consideration, Transport will determine whether or not the proposal should proceed as proposed and will inform the community and stakeholders of this decision. A submissions report addressing key themes and concerns raised during consultation will be published alongside this decision.

If the proposal is determined to proceed, Transport will continue to consult with the community and stakeholders before and during the construction period.

Contents

1 Introduction 1
1.1 Proposal identification 1
1.2 Purpose of the report 5

2 Need and options considered 6
2.1 Strategic need for the proposal 6
2.2 Existing infrastructure 7
2.3 Proposal objectives and development criteria 8
2.4 Alternatives and options considered 8

3 Description of the proposal 10
3.1 The proposal 11
3.2 Design 11
3.3 Construction activities 13
3.4 Ancillary facilities 15
3.5 Public utility adjustment 15
3.6 Property acquisition 15

4 Statutory planning framework 16
4.1 NSW legislation 16
4.2 Victorian legislation 22
4.3 Commonwealth legislation 26
4.4 Confirmation of statutory position 27

5 Consultation 28
5.1 Consultation strategy 28
5.2 Aboriginal community involvement 28
5.3 ISEPP consultation 29
5.4 Government agency and stakeholder involvement 29

6 Environmental assessment 39
6.1 Biodiversity 39
6.2 Non-Aboriginal heritage 64
6.3 Aboriginal cultural heritage 67
6.4 Transport and traffic 69
6.5 Noise and vibration 72
6.6 Landscape character and visual amenity 76
6.7 Land surface and geology 77
6.8 Hydrology, flooding and water quality 81
6.9 Socio-economic 86
6.10 Air quality 87
6.11 Waste management 89
6.12 Cumulative impacts 91

7 Environmental management 93
7.1 Environmental management plans (or system) 93
7.2 Summary of safeguards and management measures 94
7.3 Licensing and approvals 102

8 Justification and conclusion 103
8.1 Justification 103
8.2 Objects of the EP&A Act 103

8.3 Conclusion 106
9 Certification 107
10 References 107

Appendices

Appendix A	Proposal drawings
Appendix B	Consideration of clause 228(2) factors and matters of national environmental significance and Commonwealth land
Appendix C	Statutory consultation checklists and published community updates
Appendix D	Biodiversity Assessment Search Results
Appendix E	Statement of Heritage Impact
Appendix F	Aboriginal Desktop Risk Assessment
Appendix G	Operational Noise Impact Assessment

Tables

Table 4-1: Other relevant NSW legislation 17
Table 4-2: Other relevant Victorian legislation..... 24
Table 5-1: Issues raised through stakeholder consultation 30
Table 6-1: Likelihood of occurrence criteria for the study area (50 metres either side of Towong Bridge) 40
Table 6-2: Species of fish and crayfish with records from the Murray River Catchment upstream of Hume Dam 46
Table 6-3: Fauna habitat values 47
Table 6-4: Ground-truthed vegetation within the Study Area..... 53
Table 6-5: State and/or Commonwealth listed exotic species 53
Table 6-6: KTP assessment 59
Table 6-7: Biodiversity safeguards and management measures..... 62
Table 6-8: Non-Aboriginal safeguards and management measures 66
Table 6-9: Aboriginal heritage safeguards and management measures 68
Table 6-10: Land transport, access and parking safeguards and management measures 70
Table 6-11: Comparison of NSW and Victorian Construction Noise Criteria 73
Table 6-12: Recommended minimum working distances for vibration intensive plant from sensitive receiver..... 74
Table 6-13: Noise and vibration safeguards and management measures 76
Table 6-14: Landscape character and visual amenity safeguards and management measures..... 77
Table 6-15: Land surface and hydrology safeguards and management measures 79
Table 6-16: Flooding and water quality safeguards and management measures 83
Table 6-17: Properties with the proposal area..... 86
Table 6-18: Socio-economic safeguards and management measures 87
Table 6-19: Air quality safeguards and management measures 88
Table 6-20: Waste management safeguards and management measures 90
Table 6-21: Potential cumulative impacts..... 92
Table 6-22: Cumulative impacts safeguards and management measures..... 92
Table 7-1: Summary of safeguards and management measures..... 94
Table 7-2: Summary of licensing and approvals required 102
Table 8-1: Objects of the EP&A Act 103

Figures

Figure 1-1: Regional setting 2

Figure 1-2: Local setting 3

Figure 1-3: View of the existing bridge from the NSW side facing south-west to the Victorian side. 4

Figure 1-4: View of the existing bridge from the Victorian side facing north-east to the NSW side. 4

Figure 3-1: Demolition and crane work impact area 13

Figure 4-1: Zoning plan 21

Figure 6-1: Plate 1 aquatic habitat looking a) upstream and b) downstream in the study area. 43

Figure 6-2: Plate 1 (continued) aquatic habitat including c) wood debris and d) existing bridge structure in the study area. 44

Figure 6-3: Plate 1 (continued) e) existing bridge structure in the study area and f) *Macrobrachium* sp. 45

Figure 6-4: Plate 2 a) and b) potential man-made fauna habitat provided by the existing bridge structure. 49

Figure 6-5: Plate 3 a) and b) Terrestrial habitats within the study area. 50

Figure 6-6: Plate 3 (continued) c) and d) Terrestrial habitats within the study area. 51

Figure 6-7: Vegetation plan 52

Figure 6-8: Detour via Bringenbrong Bridge (RMS, 2016) 70

1 Introduction

This chapter introduces the proposal, provides the context of the environmental assessment and outlines the purpose of the report.

1.1 Proposal identification

Towong Bridge over the Murray River was constructed in 1938, and links Brooke Street Road, Towong in Victoria to Towong Road, Bringenbrong in NSW and is located within the Towong Shire local government area. It is currently the only timber beam bridge crossing of the Murray River.

The existing bridge is located within a rural environment within a scenic section of the Murray River, and is listed on *Tumbarumba Local Environmental Plan 2010* (Tumbarumba LEP) as an item of local significance.

The proposal entails the replacement of the existing bridge with a new bridge on the same alignment to provide a safe new river crossing, offering an equivalent or better standard of service than existing.

Key features of the proposal would include:

- a 58-metre, three-span bridge structure crossing the Murray River on the existing alignment
- five super-T girders in each span
- reinforced concrete headstocks
- bridge traffic barriers
- 1.95-metre-wide walkway
- demolition of the existing bridge.

The regional setting of the proposal is shown in Figure 1-1, and the local setting is shown in Figure 1-2. Views of the proposal site and existing bridge are shown in and Figure 1-4. Chapter 3 describes the proposal in more detail and section 6.9.2 identifies the properties within the proposal area.

Regional setting

TOWONG BRIDGE REPLACEMENT PROJECT

Legend

- REF study area
- Construction boundary
- Major watercourse (GA)
- Main road (GA)
- State border (Esri, 2016)

Land use (ABS, 2016)

- Other
- Commercial
- Education
- Hospital/medical
- Industrial
- Parkland
- Primary production
- Residential
- Water

FIGURE 1-1

1:25,000 Scale at A3

m
0 200 400 600 800

N

Map Produced by Cardno NSW/ACT Pty Ltd (NNSW)
Date: 2021-05-07 | Project: 80021046
Coordinate System: GDA 1994 MGA Zone 55
Map: 80021046-GS-003-RegionalPlan.mxd 02
Aerial Imagery supplied by NSW SS

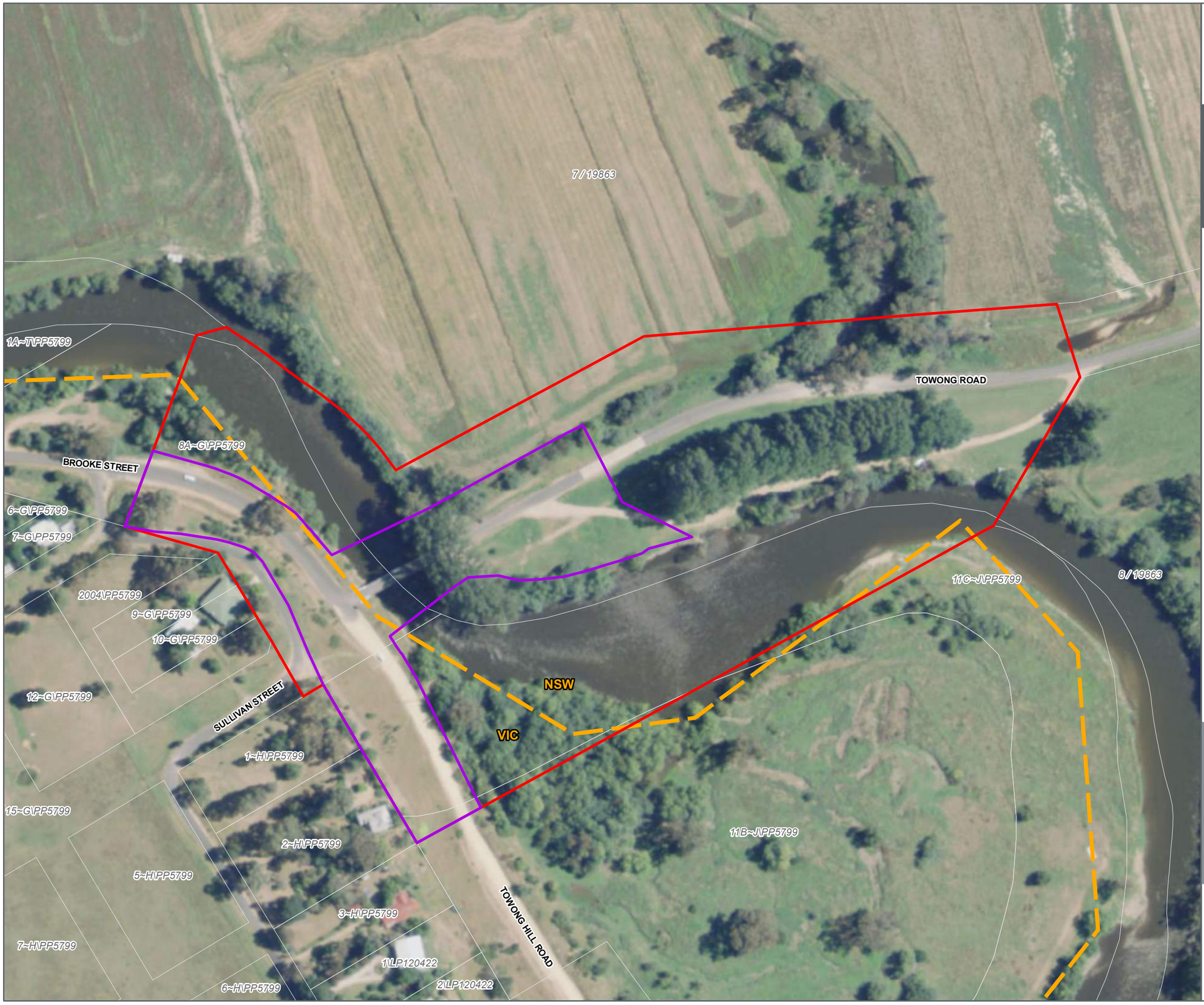

NSW GOVERNMENT

The proposal

TOWONG BRIDGE REPLACEMENT PROJECT

Legend

- REF study area (8.32 ha)
- Construction boundary (1.99 ha)
- State border (Esri, 2016)
- Cadastre (NSW SS, 2019 and VIC Lands, 2015)

FIGURE 1-2

1:2,000 Scale at A3

m
0 25 50 75 100

N

Map Produced by Cardno NSW/ACT Pty Ltd (NNSW)
Date: 2021-05-07 | Project: 80021046
Coordinate System: GDA 1994 MGA Zone 55
Map: 80021046-GS-001-SitePlan.mxd 02
Aerial Imagery supplied by NSW SS

Figure 1-3: View of the existing bridge from the NSW side facing south-west to the Victorian side.

Figure 1-4: View of the existing bridge from the Victorian side facing north-east to the NSW side.

1.2 Purpose of the report

This review of environmental factors (REF) has been prepared by Cardno (NSW/ACT) Pty Ltd on behalf of Transport. For the purposes of this work, Transport is the proponent and the determining authority under Division 5.1 of the *Environmental Planning and Assessment Act 1979* (EP&A Act).

The purpose of the REF is to describe the proposal, to document the likely impacts of the proposal on the environment, and to detail mitigation and management measures to be implemented.

The description of the proposal and assessment of associated environmental impacts has been carried out in the context of clause 228 of the Environmental Planning and Assessment Regulation 2000, the factors in *Is an EIS Required? Best Practice Guidelines for Part 5 of the Environmental Planning and Assessment Act 1979 (Is an EIS required? guidelines)* (DUAP, 1995/1996), *Roads and Related Facilities EIS Guideline* (DUAP 1996), the *Biodiversity Conservation Act 2016* (BC Act), the *Fisheries Management Act 1994* (FM Act), and the Australian Government's *Environment Protection and Biodiversity Conservation Act 1999* (EPBC Act).

In doing so, the REF helps to fulfil the requirements of:

- Section 5.5 of the EP&A Act including that Transport examine and take into account to the fullest extent possible, all matters affecting or likely to affect the environment by reason of the activity.

The findings of the REF would be considered when assessing:

- Whether the proposal is likely to have a significant impact on the environment and therefore the necessity for an environmental impact statement to be prepared and approval to be sought from the Minister for Planning and Public Spaces under Division 5.2 of the EP&A Act
- The significance of any impact on threatened species as defined by the BC Act and/or FM Act, in section 1.7 of the EP&A Act and therefore the requirement for a Species Impact Statement or a Biodiversity Development Assessment Report
- The significance of any impact on nationally listed biodiversity matters under the EPBC Act, including whether there is a real possibility that the activity may threaten long-term survival of these matters, and whether offsets are required and able to be secured.

2 Need and options considered

This chapter describes the need for the proposal in terms of its strategic setting and operational need. It identifies the various options considered and selection of the preferred option for the proposal.

2.1 Strategic need for the proposal

2.1.1 Murray River Crossings Investment Priority Assessment

The *Murray River Crossings Investment Priority Assessment* (IPA) (RMS and VicRoads, 2018) is a joint project between Roads and Maritime Services of NSW (now Transport for NSW) and VicRoads of Victoria. The IPA is a review of 32 bridge and ferry assets providing essential Murray River crossings between the two states. The purpose of the IPA is to assist in informing and prioritising future investment decisions for the Murray River crossings according to each asset's relative ranking.

Towong Bridge was ranked as number six in the list of short-term priorities for investment within the IPA. The IPA identified that the Towong Bridge does not provide a minimum standard of structure condition due to its poor condition as a result of age and therefore needs to be replaced.

2.1.2 State Infrastructure Strategy 2018 - 2038: Building Momentum

The State Infrastructure Strategy 2018 - 2038 (Infrastructure NSW, 2018) is a 20-year strategy that aims to improve NSW's economic prosperity and global competitiveness while meeting the challenges of population growth and remaining a great place to live and work. The proposal contributes to achieving the goals for transport by:

- supporting the 'hub and spoke' model of connected regional centres by maintaining a key connection between NSW and Victoria and local communities within each
- providing safer, more efficient road freight corridors by replacing a dilapidated bridge that provides a key freight corridor between NSW and Victoria
- providing infrastructure to keep pace with regional population growth by ensuring a connection at this location over the upper Murray River
- supporting the development of regional hubs by enhancing their accessibility and connectivity through the replacement of a dilapidated bridge to ensure a safe connection between regional hubs well into the future.

2.1.3 NSW Future Transport Strategy 2056

The NSW Future Transport Strategy 2056 (NSW Government, 2018) is an overarching strategy, supported by a suite of plans to achieve a 40-year vision for the NSW transport system. The plan identifies a 'hub and spoke' network of services for regional areas to provide better connections between communities and improved access to regional cities and centres. The proposal supports this 'hub and spoke' model by providing the infrastructure necessary to maintain the connections between regional towns along the NSW and Victorian border. The strategy identifies 'Customer Outcomes' to aid in the prioritisation and approval of infrastructure projects in regional NSW. The proposal contributes to the following 'Customer Outcomes':

- sustaining and enhancing the liveability of our places – The proposal would maintain the connectivity between NSW and Victoria in this area, enabling people and goods to move efficiently
- connecting people and places in growing regions – The proposal improves the overall connectivity between NSW and Victoria as currently the weight limit is reduced due to safety concerns
- safely, efficiently and reliably moving people and goods – The proposal would improve road safety in the area for all types of road users.

2.1.4 NSW Freight and Ports Plan 2018 - 2023

The NSW Freight and Ports Strategy (Transport, 2013) details how the NSW Government will provide an efficient freight network for the public and private sectors to sustain the local economies across NSW. It highlights short, medium and long-term tasks to improve freight movement on the network. The Strategy would inform government and commercial investment decisions across all modes of transport and allow for the alignment of purpose.

The proposal would contribute to the delivery of a safe connection for regional communities and freight that rely on the bridge for connection between NSW and Victoria.

2.1.5 NSW Road Safety Plan 2021

The NSW Road Safety Plan 2021 (NSW Government, 2018) features targeted and proven initiatives that will help NSW progress towards the goal of reducing road-related fatalities by 30 per cent by 2021. The Plan is a priority for the Government to improve road safety, addressing key trends, behaviours and the types of crashes occurring on NSW roads.

The proposal would simultaneously improve road safety in the area for a diverse group of users including heavy vehicles, local traffic and vulnerable road users (such as pedestrians and cyclists), all of which are key targets of the plan.

2.2 Existing infrastructure

The existing Towong Bridge is a six span timber bridge approximately 60 metres in length. The bridge was originally constructed in 1938 as five spans, and extended to six spans in 1975. The NSW abutment is constructed of timber, concrete encased timber piles and steel piles. The Victorian abutment has concrete bored piles (Transport, 2021).

There have been some modifications carried out in the past by VicRoads following investigation showing concrete encasement of piers being non-structurally sound. This includes temporary pier and abutment supports installed in 2016 to enable access for T44 vehicle loads on the bridge to extend the life of the bridge to around 2021, although this depends on the ability of the bridge substructure to resist regular flooding events that are common on the upper Murray River (Transport, 2021).

All spans except span six are about 10.6 metres in length and the overall length of the bridge is about 60.2 metres. Each span consists of four girders and transverse beams with a timber deck. The existing bridge has a single traffic lane on the bridge deck and about five metres of a clear width between the kerbs. All spans are similar in construction, being timber beam with timber decking handrails (Transport, 2021).

2.3 Proposal objectives and development criteria

2.3.1 Proposal objectives

The proposal objectives are to:

- provide a modern structure with minimal maintenance for the next 25 years
- ensure a safe crossing for all users by addressing bridge safety concerns
- ensure the bridge is capable of withstanding the current and future traffic loads.

2.4 Alternatives and options considered

This section describes the options considered to deliver the proposal.

2.4.1 Identified options

Various bridge replacement options were considered for the bridge during the earlier concept design phase (completed by SMEC as part of the *Replacement of Towong Bridge over the Murray River (B5947) Concept Design Report* (2020).

Initial options considered were as follows:

- option 1 – timber bridge “like for like” replacement, using the existing alignment
- option 2 – super-T girders, using the existing alignment
- option 3 – spaced plank, using the existing alignment
- option 4 – steel girders, using the existing alignment.

Three improved alignment options were then considered which would not require the existing bridge to be closed during construction, and therefore requiring less traffic management.

Improved alignment options considered are as follows:

- option 5 – super-T girders, using an alternative alignment
- option 6 – space planks, using an alternative alignment
- option 7 – super-T girders, using the existing alignment.

2.4.2 Analysis of options

Option 1

Option 1 is a ‘like for like’ replacement of the existing timber bridge along the existing bridge alignment. The number of spans and general arrangement matches the existing structure. The sub structure would require minor repositioning to avoid the existing footings to achieve the load requirements.

This option maintains local heritage values of the existing bridge but would likely result in costly maintenance of the structure and numerous waterway piers.

Option 2

Option 2 involves demolition of the existing timber bridge and replacing it with a new two-span Super-T structure, resulting in a reduced number of piers and decreasing construction work in the Murray River.

This option re-uses existing road geometry and has a reduced maintenance cost in comparison to timber, but does require the construction of a pier in the river and additional transportation of materials to site for the precast elements.

Option 3

Option 3 involves demolition of the existing timber bridge and replacing it with a new four-span space plank structure of approximately 15 metres in length along the existing alignment, resulting in a reduced number of piers and decreasing construction work in the Murray River.

This option has many of the same benefits as Option 2, however it results in an increase in maintenance cost when compared to the two span Super-T structure.

Option 4

Option 4 involves one span which was considered as it would not require a pier in the river. However, due to maintenance costs associated with the upkeep of the steel girders, this option was discarded.

Option 5

Option 5 involves the construction of a new three-span Super-T structure along the alternative alignment. This improves the road alignment and limits on-site work through the use of precast material, however increases piers required in the river, increases maintenance costs when compared to the two span Super-T structure and requires approach work on both sides of the structure.

Option 6

Option 6 involves the construction of a new six-span plank structure of approximately 16 metres in length each, along the alternative alignment. This option was determined to have the same benefits and disadvantages as option 5.

Option 7

Option 7 involves the demolition of the existing bridge and replacement with a new three-span Super-T structure along the existing alignment. This options was considered after constructability input following an initial Health and Safety in Design (HSiD) workshop during the concept design phase.

This option has long term benefits for maintenance due to the bridge having no bearings and expansion joints, hence saving cost. This option also limits on-site work through the use of precast material, re-uses the existing road geometry and has a reduced maintenance cost in comparison to timber. The option would however still involve the construction of piers in the river.

2.4.3 Preferred option

A multi-criterion analysis (MCA) was completed by SMEC (2020) to assess each option based on the following criterion with the relevant weightings:

- operational safety (15 per cent)
- cost (20 per cent)
- time of new build and constructability (10 per cent)
- operation and maintenance (15 per cent)
- operational traffic – efficiency, freight and service provision (10 per cent)
- community impact (closure) (10 per cent)

- environment (15 per cent)
- heritage (5 per cent).

Option 7 (involving a new Super-T girder structure on the existing alignment) achieved the best overall score and was selected as the preferred option.

While single lane bridges were considered at a high level for all options, following further discussion in the HSiD workshop, it was determined the structure should have two lanes (one lane in each direction) with a footpath on one side.

Two lanes were considered essential to ensure the future traffic demands for this road network would be met to and provide some redundancy on the Victorian side for any large vehicle movements around the T-junction. The pedestrian footpath was also considered beneficial to provide pedestrian access to a camping ground located next to the bridge on the NSW side.

3 Description of the proposal

This chapter describes the proposal and provides descriptions of existing conditions, the design parameters including major design features, the construction method and associated infrastructure and activities.

3.1 The proposal

Towong Bridge over the Murray River was constructed in 1938, and links Brooke Street, Towong in Victoria to Towong Road, Bringenbrong in NSW.

The proposal entails the replacement of the existing bridge with a new bridge on the same alignment to provide a safe new river crossing, offering an equivalent or better standard of service than existing.

Key features of the proposal would include:

- a 58-metre, three-span bridge structure crossing the Murray River on the existing alignment
- five super-T girders in each span
- reinforced concrete headstocks
- bridge traffic barriers
- 1.95-metre-wide walkway
- demolition of the existing bridge.

It is anticipated demolition of the existing bridge and construction of the proposal would occur over approximately 10 months and commence in early 2022. During demolition and construction, the crossing would be closed and a detour would be in place (refer to section 6.4 for details).

The drawing set for the proposal is located in Appendix A.

3.2 Design

3.2.1 Design criteria

The design of Towong Bridge over the Murray River is in accordance with the documents listed below. These documents outline the project specific requirements and engineering standards applicable for the bridge design:

- Roads and Maritime Specification PS361 Bridge and Structure Design
- AS5100-2017 Bridge Design set
- AS2159-2009 Piling Design and Installation
- Roads and Maritime Bridge Technical Directions and Roads and Maritime Specifications
- Roads and Maritime Structural Drafting Manual.

3.2.2 Engineering constraints

The key issues addressed and considered in the design include:

- minimising impact on the surrounding environment.

- allowing for transportation of material. Due to the site location in a rural area, using 765 millimetre deep Super-T girders allows for easier transportation of the girders. Work in the waterway is reduced by the decrease in the number of spans from the existing six-span bridge to the new three-span option.
- accessing the site for construction with heavy machinery (constructability has considered operational spaces for piling rigs and cranes. A piling rig and cranes).
- allowing sufficient laydown areas for the construction plant, equipment, and storage of bridge components.

3.2.3 Major design features

General bridge description

The proposed design is a three-span bridge structure with an overall length of 58 metres. The end spans are 18.5 metres in length with a 20-metre central span. The bridge is on a straight horizontal alignment. Longitudinally the bridge is on a grade of approximately 5.4 per cent falling from the west (abutment B) to the east (abutment A). The bridge has a width between face of barriers of 11 metres comprising two 3.5-metre wide lanes, a 1.05-metre wide westbound shoulder, a 1 metre wide -eastbound shoulder and a 1.95-metre wide raised footpath on the southern side of the bridge. The deck is square and has a one-way cross fall of two per cent.

Superstructure

The superstructure in each span consists of five 765-millimetre-deep Super-T girders with a cast in-situ reinforced concrete deck slab of minimum thickness of 200 millimetres. A 14-millimetre-thick seal wearing surface is provided over the carriageway. The superstructure is made integral with the piers. The girders would be made continuous over the piers. A single 100 millimetre diameter service conduit is provided in each barrier. In all events up to the 2000-year average recurrence interval (ARI) flood event, the water level is below the design bridge soffit level.

Substructure

The abutments are spill-through type and the reinforced concrete headstocks are supported on three 1050 millimetre diameter concrete bored piles. A 1-metre wide inspection bench is provided for maintenance inspections. The wingwalls are cantilevered from the abutment headstocks. Scour protection has been provided at each abutment.

Pier headstock is made integral with bridge superstructure. Each pier is supported by three 1050 millimetre diameter reinforced concrete columns, which are then supported by 1050 millimetre diameter bored piles.

Bearings and restraints

The girders are simply supported on rectangular laminated elastomeric bearings at abutments and continuous over piers. The bearings at abutments are mechanically restrained at the top face and restrained by friction at the base. The elastomeric bearings are installed horizontally and a tapering epoxy block between the girder and the bearing top plate accommodates the carriageway longitudinal grade and girder hog. Girders are made integral with pier headstock at pier. This eliminates the need for long term inspection and maintenance of the bearings at piers over water.

The superstructure is longitudinally restrained by the shear stiffness of the bearings at abutments and by the stiffness of the substructure at piers. Lateral restraint is provided by a lateral restraint block at each abutment.

The lateral restraint blocks use a high-density polyethylene (HDPE) plate on each face to prevent concrete bearing on concrete. At piers, the superstructure is lateral restrained by the stiffness of the substructure.

Traffic barrier

Bridge traffic barriers are 1400-millimetre-high regular performance level barriers. The barrier consists of a 920-millimetre-high concrete barriers and a 460-millimetre-high pedestrian railing on top. The standard barrier has provision for pedestrians and cyclists, which satisfies the minimum height for cyclists.

Walkway

A 1.95-metre-wide walkway would be provided on the upstream side of the bridge, with a cross fall of two per cent towards the carriageway. The walkway is raised and separated from the carriageway by a 150-millimetre-high kerb.

3.3 Construction activities

3.3.1 Work methodology

The staging and program of the work includes site mobilisation, demolition of the existing bridge, followed by the construction of the new bridge. The construction activities would be undertaken within the construction boundary identified on Figure 1-2.

Demolition of the existing bridge

A Demolition Designer's Safety Report (Cardno, 2021) includes demolition methodology for the removal of the existing bridge that minimises the number of affected trees at the site for the demolition work and maximises the efficiency of the crane work. The demolition and crane work impact area is shown on Figure 3-1.

Figure 3-1: Demolition and crane work impact area

The proposed demolition methodology is to remove the bridge superstructure in two stages. Spans one to three would be removed when the crane is set up on the embankment of abutment A, and then spans four to six would be removed when the crane has been set up on the side of abutment B.

Each span would be disassembled on the ground, loaded directly onto a truck and transported to the appropriate facility.

A Transport bridge maintenance and delivery crew would demolish the existing bridge.

Construction of replacement bridge

The construction schedule was developed on the basis of the demolition of the existing bridge followed by the construction of the new bridge. The overall expected duration is 10 months to commence in early 2022.

The construction of the new bridge would to be carried out by contractors in accordance with the design presented in Appendix A.

Navigation within the Murray River at this location would be temporarily unavailable for the duration of the demolition of the existing bridge and construction of the replacement bridge.

3.3.2 Construction workforce

It is expected there would be about 10 to 20 people onsite at any time, depending on the construction activity being completed.

3.3.3 Construction hours and duration

The proposal would be built over a duration of approximately 10 months. Construction may not be continuous as it would rely on materials delivery and the manufacture of the prefabricated components. The construction program would be affected by the need to coordinate with Council, residents, and other key stakeholders (refer to Chapter 5).

The work would take place both within and outside of standard working hours. Standard working hours are as follows:

- Monday to Friday: 7am to 6pm
- Saturday: 8am to 1pm.

Where possible, construction activities would aim to minimise disruption to the road network and the duration of the bridge closure and associated detour.

3.3.4 Construction waste management

Any materials collected would be tested and waste classified. Where possible, the materials would be reused under an exception, unless they classify as a non-exempt waste, in which case they would be transported offsite for collection and disposal at a licenced waste management facility.

3.3.5 Source and quantity of materials

Due to the remote location of the work, local supply of some materials would not be likely. As such, some materials may be transported a considerable distance to reach site.

Precast elements would likely be sourced from Victoria, while the nearest reasonable and feasible supply of the necessary concrete would be used.

In all cases, due consideration would be given to the sourcing of materials from the nearest supplier.

3.3.6 Traffic management and access

The proposed work would generate heavy vehicle movements. These heavy vehicle movements would mainly be associated with:

- delivery of construction materials
- spoil removal
- delivery and removal of construction equipment and machinery.

It is anticipated construction of the proposal would occur over approximately 10 months and commence in early 2022. During construction, the crossing would be closed and a detour would be in place for all traffic (refer to section 6.4 for details).

Navigation within the Murray River at this location would be temporarily unavailable for the duration of the demolition of the existing bridge and construction of the replacement bridge.

3.4 Ancillary facilities

One or two temporary site compounds (including site offices, amenities and plant/material storage areas etc.) may be used within the construction boundary (refer to Figure 1-2) for the duration of the construction work. The locations of the compounds have been considered within the NSW side camping ground to the immediate south of the proposal site, however this location has potential to be within the 1:20 flood zone and use of the site would be subject to strict conditions. Secondary compound locations include the existing Towong Hill Road corridor and adjacent grassed areas on the Victorian side. The final locations of site facilities would be determined by the contractor.

The site compounds would typically include a combination of demountable offices, meal rooms, toilets, showers and parking facilities. Security fencing would also be established around the site. When the construction work has been completed the site compounds would be removed and the sites would be rehabilitated.

3.5 Public utility adjustment

There is an overhead Telstra line that would be relocated in order to allow for Crane movement and activity during construction.

Before any excavation work, the locations of any existing underground utilities must be established by a Dial Before You Dig (DBYD) search, underground service search (Ground Penetrating Radar) and potholes.

One 100 millimetre diameter unplasticised polyvinyl chloride (uPVC) conduit is provided in the nearside parapet of the new bridge to allow for any future utility installations if required.

3.6 Property acquisition

No property would be acquired under the proposal. The land needed to support construction would be either leased from, or used under agreement with, Council or the relevant landowner.

4 Statutory planning framework

The majority of the works are located within the New South Wales (NSW) State border and are assessed under NSW legislation. Relatively minor road tie in works are also located within the Victorian jurisdiction. These works are contained within the highly disturbed road corridor and flood scoured embankment. This chapter provides the statutory and planning framework for the proposal for both jurisdictions.

4.1 NSW legislation

The New South Wales (NSW) State border is the high side of the Victorian bank of the Murray River. All works below this point are assessed under NSW legislation.

4.1.1 Environmental Planning and Assessment Act 1979

State Environmental Planning Policies

4.1.1.1.1 State Environmental Planning Policy (Infrastructure) 2007

State Environmental Planning Policy (Infrastructure) 2007 (ISEPP) aims to facilitate the effective delivery of infrastructure across the State.

Clause 94 of ISEPP permits development on any land for the purpose of a road or road infrastructure facilities to be carried out by or on behalf of a public authority without consent.

As the proposal is for a bridge replacement and is to be carried out by Transport, it can be assessed under Division 5.1 of the *Environmental Planning and Assessment Act 1979*. Development consent from council is not required.

The proposal is not located on land reserved under the *National Parks and Wildlife Act 1974* and does not require development consent or approval under *State Environmental Planning Policy (Coastal Management) 2018* (Coastal SEPP), *State Environmental Planning Policy (State and Regional Development) 2011* (SRD SEPP) or *State Environmental Planning Policy (State Significant Precincts) 2005* (SSP SEPP).

Part 2 of ISEPP contains provisions for public authorities to consult with local councils and other public authorities before the start of certain types of development. Consultation, including consultation as required by ISEPP (where applicable), is discussed in section 5 of this REF.

Local Environmental Plan

4.1.1.1.2 Tumbarumba Local Environmental Plan 2010

The NSW landside component of the proposal is located within the Snowy Valleys local government area (LGA). Local development control and land use zoning and planning in this LGA is currently governed under the *Tumbarumba Local Environmental Plan 2010* (Tumbarumba LEP).

As development without consent, the proposal is not subject to local environmental planning policy or development controls. The proposal would occur within RU1 Primary Production zoned land (refer to Figure 4-1).

The objectives of the RU1 Primary Production zone are:

- to encourage sustainable primary industry production by maintaining and enhancing the natural resource base

- to encourage diversity in primary industry enterprises and systems appropriate for the area
- to minimise the fragmentation and alienation of resource lands
- to minimise conflict between land uses within this zone and land uses within adjoining zones
- to protect and enhance the scenic qualities of rural areas of Tumbarumba in a manner that encourages and promotes tourist orientated development and activities.

The proposal is consistent with the zone objectives above as it improves facilities to meet the day to day needs of the residents and would only have short-term impacts to services.

The proposal would not hinder the achievement of the above objectives in the context of the LEP.

The proposal is permitted without development consent under ISEPP. Therefore, the consent requirements of the Tumbarumba LEP do not apply.

4.1.2 Other relevant NSW legislation

Table 4-1 lists the NSW legislation relevant to the proposal or the land on which the proposal would be built.

Table 4-1: Other relevant NSW legislation

Legislation and application	Relevance to proposal and further requirements
National Parks and Wildlife Act 1974: provides for the protection of Aboriginal heritage values, national parks and ecological values. Makes it an offence to harm Aboriginal objects, places or sites without permission.	The Kosciusko National Park is approximately 8.2 kilometres east of the construction boundary. There are no National Parks within or near the construction boundary. Section 86 lists offences relating to harming or desecrating Aboriginal objects. Under section 90(1) of the Act, where harm to an Aboriginal object or Aboriginal place cannot be avoided, an Aboriginal Heritage Impact Permit (AHIP) is required. Potential impacts on Aboriginal heritage are discussed in section 6.3 of this REF. No AHIP or further investigations are required for the proposal.
Heritage Act 1977: provides for the protection of conservation of buildings, work, maritime heritage (wrecks), archaeological relics and places of heritage value through their listing on various State and local registers. Makes it an offence to harm any non-Aboriginal heritage values without permission.	Approval under section 57(1) is required for work to a place, building, work, relic, moveable object, precinct, or land listed on the State Heritage Register. An excavation permit is required under Section 139 to disturb or excavate any land containing or likely to contain a relic. Section 170 of the Heritage Act requires culturally significant items or places managed or owned by Government agencies are listed on the departmental Heritage and

Legislation and application	Relevance to proposal and further requirements
	Conservation Register (Section 170 Register). The existing bridge is a Section 170 listed heritage item, and is also locally listed under the *Tumbarumba Local Environmental Plan 2010* (Tumbarumba LEP). Non-Aboriginal heritage is discussed further in section 6.2 of this REF. No permits or further investigations are required for the proposal.
Roads Act 1993: provides for the construction and maintenance of public roads. Requires consent to dig up, erect a structure or carry out work in, on or over a road.	The proposal includes impacts to Towong Road, a local road managed by Snowy Valleys Council. Notification to, and consent from, Snowy Valleys Council is required for work on Towong Road. A road occupancy licence (ROL) would be obtained prior to road or lane closures and a Section 138 permit must be obtained prior to works commencing. TfNSW must also adhere to the requirements of Part 6, Division 2 prior to the commencement of construction of the bridge.
Fisheries Management Act 1994: provides for the protection of fishery resources and values for current and future generations. Makes it an offence to harm fisheries and resources without an appropriate assessment, inclusion of safeguards and/or the appropriate permissions to carry out certain work.	An impact assessment was prepared in accordance with Environmental Impact Assessment Practice Note: Biodiversity Assessment (EIA-N06) (RMS, 2016b). For Part 5 projects, if the proponent is not Council, any disturbance to the streambed (top of bank to top of bank) would require consultation with Department of Primary Industries (DPI) - Fisheries. Potential impacts on terrestrial and aquatic ecology are discussed in section 6.1 of this REF. Refer to section 5.5 for comments returned during the consultation period.
Biodiversity Conservation Act 2016: provides for a strategic approach to conservation in NSW. It includes provisions for risk based assessment of native plant and animal impacts, including a Biodiversity Assessment Method (BAM) to assess the impact of actions on threatened species, threatened ecological communities and their habitats.	An impact assessment was prepared in accordance with Environmental Impact Assessment Practice Note: Biodiversity Assessment (EIA-N06) (RMS, 2016b). Potential impacts on terrestrial and aquatic ecology are discussed in section 6.1 of this REF.
Protection of the Environment Operations Act 1997: focuses on environmental protection and provisions for the reduction of water, noise and air pollutions and the storage, treatment and disposal of waste. Introduces licencing provisions for scheduled activities	Transport staff and/or contractors working on behalf of Transport are required to notify the EPA when a ‘pollution incident’ occurs that is likely to impact upon the environment as per section 148 of the Act. An incident management plan would be included within

Legislation and application	Relevance to proposal and further requirements
that are of a nature and scale that have potential to cause environmental pollution. Also includes measures to limit pollution and manage waste.	the Construction Environmental Management Plan (CEMP). Under Schedule 1 of the POEO Act, an Environment Protection Licence (EPL) is required for scheduled activities, where they include: • Extraction or processing of more than 50,000 tonnes of material are expected over the life of the project • The construction of roads with four or more lanes over a continuous length of five kilometres within a main road. The proposal would not result in the construction of four or more lanes over a length of five kilometres or more. An EPL is unlikely to be required for the construction work associated with the proposal. Section 143 of the POEO Act makes it an offence to transport waste to a place that cannot lawfully be used as a waste facility for that waste. Where relevant, waste material required to be disposed off-site would be recorded through a Section 143 notice.
Crown Lands Management Act 2016: to provide for the ownership, use and management of the Crown land of New South Wales, to provide clarity concerning the law applicable to Crown land, to require environmental, social, cultural heritage and economic considerations to be taken into account in decision-making about Crown land, to provide for the consistent, efficient, fair and transparent management of Crown land for the benefit of the people of NSW, and to provide for the management of Crown land having regard to the principles of Crown land management.	The proposal includes impacts to Crown waterway associated with the Murray River. Notification to Crown Lands is required. Refer to section 5.5 for comments returned during the consultation period.
Contaminated Land Management Act 1997: Must report to EPA if contaminated land is encountered during the work that meets the duty to report contamination requirements under section 60 of this Act Aims to establish a process for investigating and (where appropriate) remediating land the EPA considers to be contaminated significantly enough to require regulation under Division 2 of Part 3. The Act aims to set out accountabilities for managing contamination if the EPA considers the contamination is significant enough to require regulation under Division 2 of Part 3.	There are no registered contaminated sites within the construction boundary. Potential impacts on contamination are discussed in section 6.7 of this REF.

Legislation and application	Relevance to proposal and further requirements
Water Management Act 2000: Provides for the sustainable and integrated management of the water sources of the State for the benefit of both present and future generations. The Act also controls the carrying out of activities in or near water sources in NSW, the extraction and use of water and the construction of work such as dams and weirs.	Transport is exempt from requiring a Water Use and a Controlled Activity Approval. No water extraction is proposed as part of the work.

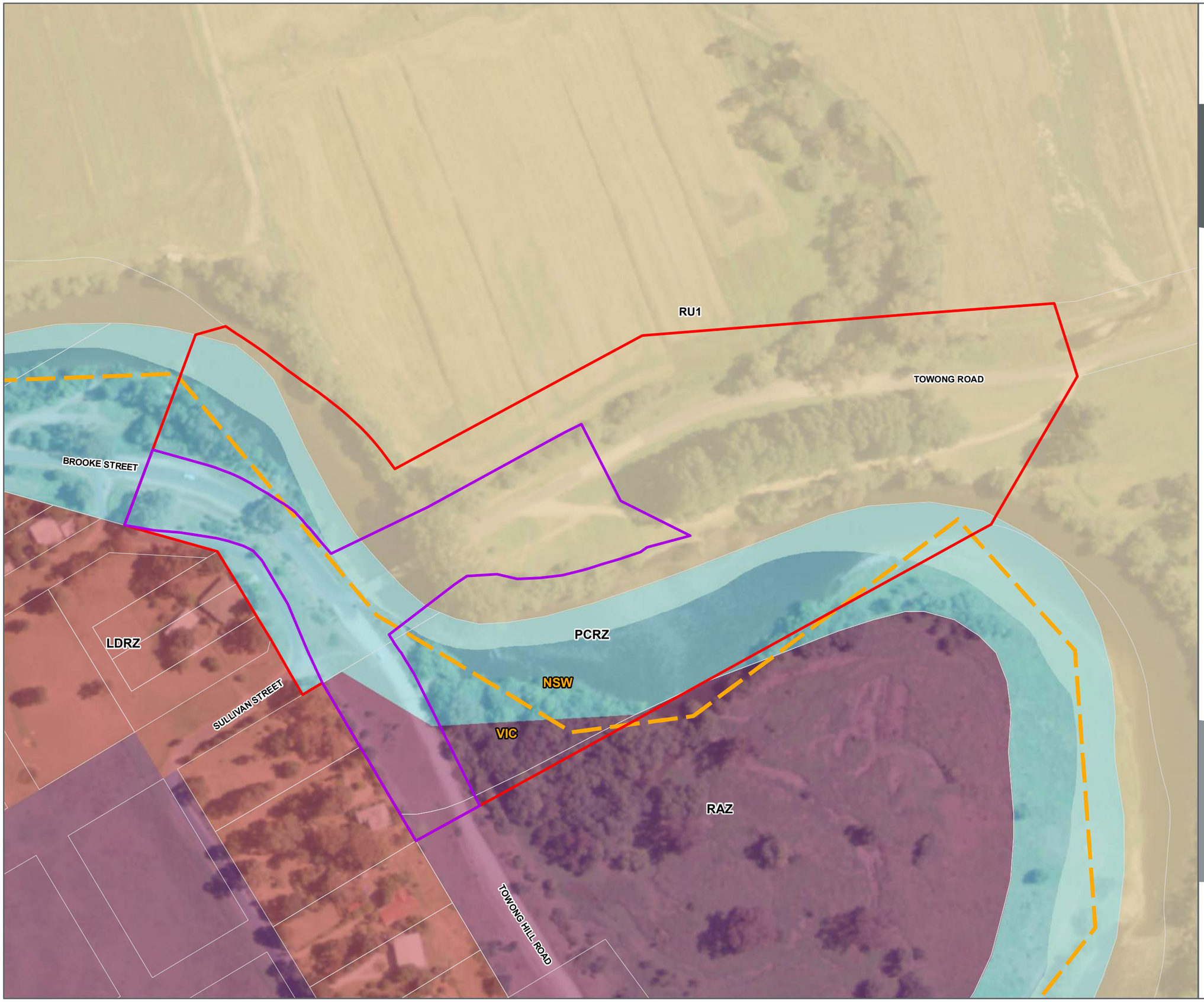

NSW GOVERNMENT

Zoning plan

TOWONG BRIDGE REPLACEMENT PROJECT

Legend

- REF study area
- Construction boundary
- State border (Esri, 2016)
- Cadastre (NSW SS, 2019 and VIC Lands, 2015)

Zoning - Towong PS (DELWP, April 2021)

- LDRZ - Low Density Residential Zone
- PCRZ - Public Conservation and Resource Zone
- RAZ - Rural Activity

Zoning - Tumbarumba LEP 2010 (DPE, Nov 2019)

- RU1 - Primary Production

FIGURE 4-1

1:2,000 Scale at A3

m
0 25 50 75 100

N

Map Produced by Cardno NSW/ACT Pty Ltd (NNSW)
Date: 2021-05-07 | Project: 80021046
Coordinate System: GDA 1994 MGA Zone 55
Map: 80021046-GS-005-ZoningPlan.mxd 01
Aerial Imagery supplied by NSW SS

4.2 Victorian legislation

The New South Wales/Victoria State border is positioned on the high side of the Victorian bank (left side, when looking downstream) of the Murray River. Generally, all works above and beyond this point are assessed under Victorian legislation. As described in this section, section 6 and section 8, the potential for environmental, heritage and socio-economic impacts is considered to be low, and as such, assessment under the *Environment Effects Act 1978* is not required. Accordingly, assessment under the *Planning and Environment Act 1987* is the primary environmental and planning instrument that applies to the project.

The potential requirement for regulatory approvals associated with Victorian legislation and policies would be finalised during the consultation strategy, with all requisite approvals to be acquired prior to the works commencing. Relative to the works undertaken within NSW, the proportion of works to be undertaken in Victoria is relatively minor and contained within the highly disturbed road corridor and flood scoured embankment, however, all necessary statutory requirements would be met as required, unless exemptions apply (to various scope items, activities, works, etc).

The following sections outline the relevant Victorian legislation and policies that apply to this type of development. Towong Shire Council and the applicable Victorian State Agencies would be consulted as per the project communications plan currently under preparation to confirm the relevant legislative provisions (including any required approvals for the proposed works within the Victorian State border.

4.2.1 Planning and Environment Act 1987

Planning Scheme

4.2.1.1.1 Towong Planning Scheme

The landside component of the proposal is located within Towong Shire local government area (LGA). Local development control and land use zoning and planning in this LGA is currently governed under the *Towong Planning Scheme* (Towong PS).

The proposal would occur within PCRZ Public Conservation and Resource Zone and RAZ Rural Activity Zone zoned land (refer to Figure 4-1). In addition, the land is also affected by the Floodway Overlay (FO) and Land Subject to Inundation Overlay (LSIO).

Clause 62.01 of the Towong PS notes "*the use of land for a Road except within the Urban Floodway Zone and a Public Conservation and Resource Zone"* as a use not requiring a permit.

Within clause 36.03 of the Towong PS, 'road' as a use within the PCRZ zone notes roads do not require a permit except if one of the following conditions are met:

- "a use conducted by or on behalf of a public land manager or Parks Victoria under the relevant provisions of the *Local Government Act 1989*, the *Reference Areas Act 1978*, the *National Parks Act 1975*, the *Fisheries Act 1995*, the *Wildlife Act 1975*, the *Forests Act 1958*, the *Water Industry Act 1994*, the *Water Act 1989*, the *Marine Act 1988*, the *Port of Melbourne Authority Act 1958* or the *Crown Land (Reserves) Act 1978*"; or
- "specified in an Incorporated plan in a schedule to this zone".

If the above conditions are not met, then the use of the PCRZ for 'road' use is prohibited, however the work within the RAZ are allowable without a permit.

Clause 36.03-2 of the Towong PS details that a permit is required to construct a building or construct or carry out works within the PCRZ zone, however this does not apply to:

- "A building or works shown in an Incorporated plan which applies to the land."
- "A building or works specified in Clause 62.02-1 or 62.02-2 carried out by or on behalf of a public authority or municipal council, if the public authority or municipal council is carrying out functions, powers or duties conferred by or under the *Local Government Act 1989*, the *Reference Areas Act 1978*, the *National Parks Act 1975*, the *Fisheries Act 1995*, the *Wildlife Act 1975*, the *Forests Act 1958*, the *Water Industry Act 1994,* the *Water Act 1989*, the *Marine Act 1988*, the *Port of Melbourne Authority Act 1958* or the *Crown Land (Reserves) Act 1978*."
- "A building or works carried out by or on behalf of a public land manager, Parks Victoria or the Great Ocean Road Coast and Parks Authority, under the *Local Government Act 1989,* the *Reference Areas Act 1978*, the *National Parks Act 1975*, the *Fisheries Act 1995*, the *Wildlife Act 1975*, the *Forests Act 1958*, the *Water Industry Act 1994,* the *Water Act 1989*, the *Marine Act 1988*, the *Port of Melbourne Authority Act 1958,* the *Crown Land (Reserves) Act 1978*, or the *Road Management Act 2004.*"

Towong Shire Council would be consulted as per the project communications plan currently under preparation. Matters regarding the permissibility of the works in the PCRZ and the proponent for the works on the Victorian side would also be discussed at this time.

In the event the relevant exemptions are not applicable in this instance, consent would need to be obtained from the relevant public land manager. If there is no public land manager, consent is to be obtained from the Secretary to the Department of Environment, Land, Water and Planning.

The objectives of the zones where the proposal would occur are as follows:

PCRZ Public Conservation and Resource Zone

- to implement the Municipal Planning Strategy and the Planning Policy Framework
- to protect and conserve the natural environment and natural processes for their historic, scientific, landscape, habitat or cultural values
- to provide facilities which assist in public education and interpretation of the natural environment with minimal degradation of the natural environment or natural processes
- to provide for appropriate resource based uses.

RAZ Rural Activity Zone

- to implement the Municipal Planning Strategy and the Planning Policy Framework
- to provide for the use of land for agriculture
- to provide for other uses and development, in appropriate locations, which are compatible with agriculture and the environmental and landscape characteristics of the area
- to ensure use and development does not adversely affect surrounding land uses
- to provide for the use and development of land for the specific purposes identified in a schedule to this zone
- to protect and enhance natural resources and the biodiversity of the area

- to encourage use and development of land based on comprehensive and sustainable land management practices and infrastructure provision.

The proposal is consistent with the zone objectives above as it improves facilities to meet the day to day needs of the residents and would only have short-term impacts to services.

The Towong PS (clause 62.02-3) requires a Planning Permit for the removal, destruction and lopping of trees and the removal of vegetation. This requirement is in accordance with the provisions of the *Flora and Fauna Guarantee Act 1988*. Vegetation removal within Victoria as a result of this proposal is limited to exotics including grasses. No tree removal within Victoria is required.

The proposal would not hinder the achievement of the above objectives in the context of the Towong PS.

4.2.2 Other relevant Victorian legislation

Table 4-1 lists the Victorian legislation relevant to the proposal or the land on which the proposal would be built.

Table 4-2: Other relevant Victorian legislation

Legislation and application	Relevance to proposal and further requirements
Environmental Protection Act 1970	The Act provides a legislative framework for the protection of the environment in Victoria relating to air, land and aquatic environments. By controlling impacts caused by pollution, wastes, noise, vibration and emissions, the Act's primary intent is to prevent harm to the environment and enhance natural values. The Act also establishes the various Victorian State Environment Protection Policies (SEPPs). NOTE: The Act was superseded by the Victorian *Environment Protection Act 2017,* which took effect from 1st July 2021. Transitional provisions to this Act may apply during project delivery.
Environment Protection Act 2017	The Act commenced on Thursday 1st July 2021. Several key changes to the Act include the establishment of general environmental duty (GED), and a harsher financial and legal penalty regime for businesses and individuals.
Aboriginal Heritage Act 2006: provides for the protection of Aboriginal cultural heritage and Aboriginal intangible heritage in Victoria	Potential impacts on Aboriginal heritage are discussed in section 6.3 of this REF. No further investigations are required for the proposal as the works are considered an exempt activity under r.15(2) and r.15(2)(b) of the Victorian *Aboriginal Heritage Regulations 2018*...

Legislation and application	Relevance to proposal and further requirements
Heritage Act 2017: provides for the protection and conservation of the cultural heritage of the State	Non-Aboriginal heritage is discussed further in section 6.2 of this REF. No further investigations are required for the proposal.
Environmental Effects Act 1978: provides for assessment proposals that are capable of having a significant effect on the environment. The criteria for determining whether a project should be referred to the Minister for Planning requesting a decision on whether an Environment Effects Statement (EES) is required are detailed within the Ministerial Guidelines for Assessment of Environmental Effects under the *Environment Effects Act 1978.*	Less than approximately three square metres of vegetation is expected to be required to be removed along the river banks to accommodate the construction of the proposal. The vegetation to be removed within Victoria consists of exotics including grasses. It is expected no vegetation clearance would be required for the establishment of a site compound. Heritage values of the bridge are significantly diminished by the dilapidation of the structure and safety risks to road users. The proposal is not considered to meet any of the referral criteria matters within the Ministerial Guidelines for Assessment of Environmental Effects to result in the requirement for an EES subject to appropriate mitigation measures. Potential impacts environmental matters and recommended mitigation measures are discussed in chapter 6 of this REF.
Flora and Fauna Guarantee Act 1988: provides a legal and administrative structure to enable and promote the conservation of Victoria's native flora and fauna and to provide for a choice of procedures which can be used for the conservation, management or control of flora and fauna and the management of potentially threatening processes.	An impact assessment was prepared in accordance with Environmental Impact Assessment Practice Note: Biodiversity Assessment (EIA-N06) (RMS, 2016b). Potential impacts on terrestrial and aquatic ecology are discussed in section 6.1 of this REF. No further investigations or permits are required for the proposal.
Fisheries Act 1995: provides a modern legislative framework for the regulation, management and conservation of Victorian fisheries including aquatic habitats	All land below the Victorian bank of the Murray River is assessed under NSW legislation. An impact assessment was prepared in accordance with Environmental Impact Assessment Practice Note: Biodiversity Assessment (EIA-N06) (RMS, 2016b). Potential impacts on terrestrial and aquatic ecology are discussed in section 6.1 of this REF. No further investigations or permits are required for the proposal.
Roads Management Act 2004: provides the management of the road network which facilitates the coordination of the various	Clause 16 of Schedule 7 of this Act requires an application to the coordinating road

Legislation and application	Relevance to proposal and further requirements
uses of road reserves for roadways, pathways, infrastructure and similar purposes	authority for written consent to conduct proposed work on a road. Part 2, Clause 13 of the Road Management (Works and Infrastructure) Regulations 2015 offers exemption from requirement to obtain consent in respect of certain agreed works. Towong Shire Council is the coordinating road authority for the work within Towong Hill Road and Brooke Street corridor. Transport is required to either apply for written consent for the works or enter into an agreement for the works as an exemption with Towong Shire Council as the coordinating road authority. This is to be confirmed during the preparation of the consultation strategy currently being prepared for the proposal by Transport.

4.2.3 Relevant Victorian instruments and policies

Victoria's State Environment Protection Policies (SEPPs) are established under the *Environment Protection (EP) Act 2017*. The Victorian Environment Protection Authority (EPA) has powers under the Victorian EP Act to enforce the provisions of the SEPPs. In the context of this project, the SEPPs are for consideration and application where relevant during the project's design and construction.

SEPP (Ambient Air Quality) – Sets the air quality objectives and goals for Victoria for common pollutants, including those outlined in the National Environment Protection Council (Ambient Air Quality Measure)

SEPP (Air Quality Management) – Establishes the framework for managing emissions in the environment from sources of air pollutants to attain the objectives outlined in the SEPP (Ambient Air Quality).

SEPP (Control of Noise from Commerce, Industry and Trade) – Sets out the framework for protecting people from the effects of noise in noise-sensitive areas such as industrial zones and commercial premises. This is supported by outlining the noise limits in the SEPP to ensure that new and proposed developments do not exceed these limits.

4.3 Commonwealth legislation

4.3.1 Environment Protection and Biodiversity Conservation Act 1999

Under the *Environment Protection and Biodiversity Conservation Act 1999* (EPBC Act) a referral is required to the Australian Government for proposed actions that have the potential to significantly impact on matters of national environmental significance or the environment of Commonwealth land. These are considered in Appendix D and section 6 of the REF.

A referral is not required for proposed road activities that may affect nationally listed threatened species, endangered ecological communities and migratory species. This is because requirements for considering impacts to these biodiversity matters are the

subject of a strategic assessment approval granted under the EPBC Act by the Australian Government in September 2015.

Potential impacts to these biodiversity matters are also considered as part of Chapter 6 of the REF and Appendix D.

4.3.2 Native Title Act 1993

The *Native Title Act 1993* recognises and protects native title. The Act covers actions affecting native title and the processes for determining whether native title exists and compensation for actions affective native title. It establishes the Native Title Registrar, the National Native Title Tribunal, the Register of Native Title Claims and the Register of Indigenous Land Use Agreements, and the National Native Title Register. Under the Act a future act includes proposed public infrastructure on land or waters that affects native title rights or interest.

A search of the Native Title Tribunal Native Title Vision website was carried out on 12 February 2021, with no Native Title holders/claimants identified.

4.4 Confirmation of statutory position

The majority of the works are located within the NSW State border and are assessed under NSW legislation. Relatively minor works are also located within the Victorian jurisdiction.

<u>New South Wales</u>

The proposal is categorised as development for the purpose of a bridge and is being carried out by or on behalf of a public authority. Under clause 94 of ISEPP the proposal is permissible without consent. The proposal is not State significant infrastructure or State significant development. The proposal can be assessed under Division 5.1 of the EP&A Act.

Accordingly, Transport is the determining authority for the proposal in NSW. This REF fulfils Transport's obligation under Section 5.5 of the EP&A Act including to examine and take into account to the fullest extent possible all matters affecting or likely to affect the environment by reason of the activity.

<u>Victoria</u>

Under the Victorian *Roads Management Act 2004*, Schedule 7 and the Roads Management (Works and Infrastructure) Regulations 2005, a work within roadway consent is needed from Towong Shire Council to occupy and close Towong Hill Road to allow for work and to allow for the potential establishment of the site compound on the Victoria side of the bridge. Alternatively, Part 2, Clause 13 of the Road Management (Works and Infrastructure) Regulations 2015 may offer exemption from requirement to obtain consent in respect of certain agreed works.

Towong Shire Council would be consulted as per the project communications plan currently under preparation regarding the pathway for consent within Victoria.

Following consultation with Towong Shire Council (and State agencies, if required), the relevant legislation and approval pathway would be confirmed for the relatively minor works proposed within the Victorian jurisdiction. All requisite approvals would be acquired prior to works commencing.

5 Consultation

This chapter discusses the consultation carried out to date for the proposal and the consultation proposed for the future.

5.1 Consultation strategy

A consultation strategy is currently being prepared for the proposal by Transport for NSW.

The communications approach for Towong Bridge replacement would focus on the project activities and notifications required to regularly inform the community of progress and delivery of the project. Transport for NSW would establish relationships and maintain regular communication with key stakeholder groups.

The project team aims to establish relationships and maintain regular communication, information and interface with councils either side of the border, local landholders, local Members of Parliament, freight industry, agricultural industry and all road users. Ongoing communications and consultation would occur to ensure all issues would be addressed.

Information would also be sent for possible inclusion on councils' websites, school newsletters and distributed through varying communication channels where possible.

The following engagement tool and techniques would be used:

- media release announcing the project milestones
- project notifications and project updates for nearby residents, businesses and stakeholders
- door-knocking nearby residents and businesses
- meetings and briefings for stakeholders, businesses and residents (as required)
- social media updates
- letters, emails and targeted correspondence to a distribution list
- variable-message signs (VMS) as required.

The wider community would be kept informed via a variety of tools including media releases, traffic alerts, notification letters, social media, VMS, community updates and advertisements where appropriate.

5.2 Aboriginal community involvement

Aboriginal heritage impacts have been considered within an Aboriginal Desktop Risk Assessment (ADRA) prepared by Austral Archaeology (Austral, 2021a) (refer to section 6.3 for further discussion and Appendix F for full report). The ADRA was prepared in accordance with Stage 1 of the Roads and Maritime Services Procedure for Aboriginal Cultural Heritage Consultation and Investigation (PACHCI) (RMS, 2011).

No Aboriginal community consultation was carried out as part of this process.

The ADRA completed for the proposal concluded the proposal was unlikely to have an impact on Aboriginal cultural heritage and did not require further investigations or assessment. An Aboriginal heritage impact permit (AHIP) under the *National Parks and Wildlife Act 1974* is not needed for the proposal.

5.3 ISEPP consultation

Appendix B contains an ISEPP consultation checklist that documents how ISEPP consultation requirements have been considered. In the case of this proposal, it triggers the notification requirements with Snowy Valleys Council (NSW) under clauses 13 and 14 as it:

- would involve the installation of a temporary structure on, or the enclosing of, a public place
- would involve excavation of a road or adjacent footpath
- would involve work affecting a local heritage item.

Snowy Valleys Council was contacted via letter on 31 March 2021 and feedback was requested by 21 April 2021.

No response was received by the closing date.

5.4 Government agency and stakeholder involvement

Various government agencies and stakeholders have been consulted about the proposal including:

- Towong Shire Council
- Snowy Valleys Council
- Department of Primary Industries – Fisheries (DPI Fisheries)
- Department Planning, Industry and Environment – Crown Land (DPIE Crown Land)
- Natural Resources Access Regulator (NRAR)
- Snowy Hydro
- NSW Environment Protection Authority (EPA)
- WaterNSW
- Murray–Darling Basin Authority (MDBA)
- VicRoads (now Department of Transport (DOT) Victoria)
- Department of Environment, Land, Water and Planning (DELWP) - Heritage
- North East Catchment Management Authority (NECMA).

These government agencies and stakeholders were contacted via letter on 31 March 2021 and feedback was requested by 21 April 2021.

Issues that have been raised as a result of consultation with these agencies and stakeholders are outlined in Table 5-1.

Table 5-1: Issues raised through stakeholder consultation

Agency	Issue raised	Response
Towong Shire Council	• Towong Bridge is an important link across the Murray for local residents, it is assumed there will be long term closures while work is carried out. • It is suggested consultation is carried out with Towong Community Recovery Committee through Council's Bushfire Recovery Hub.	Notification and consultation would occur with relevant groups and road users before any bridge closures.
Snowy Valleys Council	• No response was received.	
DPI Fisheries	• As any work within waterways has the potential to impact on aquatic habitats and associated species, any environmental assessment document prepared for Transport should be forwarded to DPI Fisheries for review and comment before work starts. Adequate time should be given for consultation between Transport and DPI Fisheries on the design and construction of the bridge work to be carried out. • Transport should be aware that if the bridge work involves any dredging and reclamation work, as per Section 199 of the *Fisheries Management Act*, written notice of the work must be provided and consider any matters concerning the proposed work raised within 28 days after giving of the notice. If the proposed work will permanently or temporarily inhibit, obstruct or block the movement of fish than the applicants will be required to obtain a permit under Part 7 of the *Fisheries Management Act.* • The environmental assessment should assess whether there is likely to be any significant impacts on listed aquatic threatened species, populations or communities. A 7-part test as per Section 5A of the *Environmental Planning and Assessment Act 1979* should be carried out for aquatic threatened species potentially impacted on by the proposal. • Key Threatening Process (KTP) are also listed under the threatened species provisions of the *Fisheries Management Act 1994.* The REF should outline any KTPs that are going to be carried out as part of or as a result of the work, these may include the degradation of native riparian	An impact assessment was prepared in accordance with Environmental Impact Assessment Practice Note: Biodiversity Assessment (EIA-N06) (RMS, 2016b). Potential impacts on terrestrial and aquatic ecology are discussed in section 6.1 of this REF.

Agency	Issue raised	Response
	vegetation (including aquatic vegetation), removal of large wood debris, or the installation and operation of instream structures that alter the natural flow regimes of rivers or streams. Information should also be presented outlining any mitigation measures that are to be carried out as part of the proposal (i.e. revegetation). • Please include in the environmental assessment any impact mitigation measures that will be carried out before, during and after the proposed work is completed including sediment and erosion control and site rehabilitation measures.	
DPIE - Crown Land	• The Murray River in the location of Towong Bridge replacement proposal area is a Crown waterway and as such will require approval from DPIE - Crown Lands before work start. • Should the Bridge replacement require a Development Application (DA), or is considered to be a major project under other applicable legislation, a Land Owners Consent Form should be lodged in respect of development proposals on Crown land (including Crown waterways). The completed DA (or other relevant application), in its entirety must be forwarded to the Department for the provision of Land Owners Consent before lodgement with Council (or other relevant consent authority). • If the project does not require a DA, a licence application must be submitted to the Department before any work being carried out. Appropriate supporting material must be included with the application, including diagrams, Review of Environmental Factors (REF), and the consent of any adjacent (affected) landholders, for such issues such as access to the site; as well as any further requested information. In addition, consent from any other relevant authorities will also need to be included here.	Noted. As the proposal is for a bridge replacement and is to be carried out by Transport, it can be assessed under Division 5.1 of the Environmental Planning and Assessment Act 1979. Development consent from council is not required. A licence application would be submitted to the DPIE – Crown Lands before any work is carried out.
NRAR	**Assessment requirements** • Details of the proposed work, location and timing. This is to include work required for construction, operation and decommissioning. A location	A description of the proposal is located in section 2 of this document, with the proposal drawing set in Appendix A. Photographs of the site are located in section 1.2.

Agency	Issue raised	Response
	plan and an indicative site plan showing the proposed work is required. Photos of the sites also need to be included. • Conceptual design plan of infrastructure proposed, including cross-section and long section and indicative measurements to understand the relative scale of work. This would need to include any coffer dams, temporary in-channel work, in addition to the permanent work. • Quantify volumes of surface water and groundwater proposed to be taken by the activity from each water source as defined by the relevant Water Sharing Plan. Also include any water disposal, treatment requirements, water storage and water return to facilitate construction and decommissioning. • Confirm the potential for aquifer interception. Where an aquifer is to be intercepted, an impact assessment will be required to meet the requirements of the NSW Aquifer Interference Policy or justification where this is not deemed necessary. • Assessment of impacts on surface and groundwater sources (both quality and quantity), related infrastructure, adjacent licensed water users, basic landholder rights, watercourses, riparian land, flooding and groundwater dependent ecosystems. Include measures proposed to reduce and mitigate impacts. This is to address construction and any operational impacts. Impacts on bed, bank and floodplain stability due to any construction and operational changes to local hydraulic and hydrologic conditions will need to be assessed. • Separation of clean and dirty water, and development of sediment and erosion control measures in accordance with industry standards. • Plan in the event river flows may inundate or have the potential to remove construction related infrastructure. • As work is proposed within waterfront land (i.e. in or within 40 m of a watercourse) design and management of the proposed work will need to	No major water extraction is proposed as part of the work, minimal amount of water would be pumped out for the purpose of piling works laying of temporary platform – the quantity of water pumped out is limited to less than 50m3 Potential impacts on water quality and hydrology are discussed in section 6.11. Section 7 of this REF includes safeguards and management measures to protect and maintain the environment during the proposed work.

Agency	Issue raised	Response
	meet the requirements of the Guidelines for Controlled Activities on Waterfront Land.	
	Regulatory Requirements • As a public authority, Transport for NSW is exempt from the requirement to hold a controlled activity approval to carry out work on waterfront land. Relevant guidelines are to be addressed in the REF and associated management plan documentation. • If water is required for dust suppression by a public authority or for road construction and road maintenance by a roads authority, an exemption from the requirement to hold a Water Access Licence exists under Schedule 4 (2 and 5) of the Water Management (General) Regulation 2018 (Water Regulation). Water to be taken that does not meet these exemptions will require a WAL with sufficient entitlement that nominates a relevant work. • If work is required to extract groundwater or surface water for dust suppression by a public authority, an exemption exists under clause 38(e) of the Water Regulation from the requirement to hold a water supply work approval where the work is a truck mounted water tanker with pump. If extraction work is required that do not meet this exemption either in terms of the purpose or the type of work, a water supply work approval will need to be obtained. • As part of the work is located on a floodplain which may affect the flow of floodwater, or flow of water to or from a river, these can be considered a flood work for the *Water Management Act 2000*. An exemption exists however from the need to hold a flood work approval under clause 49 of the Water Regulation that is applicable for a roads authority where constructing a flood work for the purposes of a public road.	Noted.
Snowy Hydro	No response was received.	

Agency	Issue raised	Response
EPA	• Based on the information provided the proposed activity is not scheduled under the POEO Act and the proposed work does not require an Environment Protection Licence. • However, given the proposed activity is being carried out by Transport, the EPA will be the appropriate regulatory authority for matters relating to the POEO Act for this development. Transport should be aware under Section 120 of the POEO Act it is an offence to pollute waters. • The environmental assessment should consider the potential impacts of the proposal on the surrounding environment as well as the disposal of waste from the project. The issues we consider need to be assessed include water and wastewater management, sediment and erosion controls, construction noise, dust, and waste management. • The environmental assessment should also consider the potential water quality impact of the proposed work on the Murray River and clearly detail the best practice measures that will be adopted to mitigate impacts from this activity. Where appropriate measures must be designed and implemented to minimise and control the emission of dust and noise that have the potential to impact on nearby receptors.	Noted.

	Potential impacts on water quantity and quality
	• The goals of the project should include the following.
	  ○ No pollution of waters (including surface and groundwater), except to the extent authorised by the EPA (i.e., in accordance with an Environment Protection Licence)
	  ○ Polluted water is captured on the site and collected, treated and beneficially reused, where this is safe and practicable to do so
	  ○ It is carried out in accordance with best management practice; and measures adopted will be determined by the required water quality outcomes
	  ○ It is acceptable in terms of the achievement or protection of the River Flow Objectives and Water Quality Objectives.
		Water quality and hydrology is discussed in section 6.11.
		Chapter 7 of this REF includes safeguards and management measures to protect and maintain the environment during the proposed work.

Agency	Issue raised	Response
	• The environmental assessment prepared for the project should demonstrate whether the discharge criteria for pollutants will maintain or restore the environmental values of the receiving waters. Where the project will cause, or is likely to cause water pollution, and where it is demonstrated the environmental values will not be maintained or restored, the project must also consider any practical measures that can be taken to restore or maintain the environmental values of the receiving waters. • Details of the site drainage and any natural or artificial waters within or adjacent to the development must be identified and where applicable measures proposed to mitigate potential impacts of the development on these waters. • A characterisation of potential water pollutants at the site should also be carried out including the identification of any proposed water pollution controls and their performance. This should include details of the design and location of sediment and erosion controls as well as wastewater management controls. • The environmental assessment should provide details of any water management systems for the site to ensure surface waters are protected from contaminants. Spill management measures, including items such as bunding, and emergency procedures should be clearly outlined. The environmental assessment should document the measures that will achieve the above goals.	
	Potential impacts on air quality • The goals of the project in relation to air quality should include mitigation of air quality impacts such that potential impacts on sensitive receptors are minimised in accordance with the EPA particulate matter and deposited dust criteria. • The potential for dust impacts concerned with potential emissions including but not necessarily limited to construction, traffic movements, open exposed areas, material processing and handling, transfer points, and loading/unloading facilities. All potentially impacted residential or	Air quality is discussed in section 6.10. Chapter 7 of this REF includes safeguards and management measures to protect and maintain the environment during the proposed work.

Agency	Issue raised	Response
	sensitive premises likely to be impacted by the development must be identified. • The environmental assessment will need to document the proposed measures to manage and mitigate dust from these activities and their anticipated performance to achieve the goals above.	
	Potential impacts of noise • The goals of the project should include design, construction, operation and maintenance of the project area in accordance with relevant EPA policy, guidelines and criteria, and in order to minimise potential impacts from noise. • The EPA expects potential noise sources are assessed in accordance with the Noise Policy for Industry (EPA 2017), and where required mitigation measures are proposed (e.g. appropriate equipment chosen to minimise noise levels). All residential or noise sensitive premises likely to be impacted by the development must be identified and included in the assessment.	Noise and vibration is discussed in section 6.5. Chapter 7 of this REF includes safeguards and management measures to protect and maintain the environment during the proposed work.

	Potential impacts on land
	• The goals of the project should include the following.
	  ○ No pollution of land, except to the extent authorised by the EPA (i.e., in accordance with an Environment Protection Licence)
	  ○ The potential impact of land erosion from the development is mitigated.
	• The environmental assessment should document the measures that will achieve the above goals.
		Waste management is discussed in section 6.11, and land surface and hydrology is discussed in section 6.7.
		Chapter 7 of this REF includes safeguards and management measures to protect and maintain the environment during the proposed work.

	Waste and chemical impacts • The environmental assessment must assess all aspects of waste generation, management and disposal associated with the project. The goals of the project should include the following:	Waste management is discussed in section 6.11. Chapter 7 of this REF includes safeguards and management measures to protect and maintain the environment during the proposed work.

Agency	Issue raised	Response
	○ It is in accordance with the principles of the waste hierarchy and cleaner production ○ Where potential impacts associated with the handling, processing and storage of all waste materials generated at the premises are identified, these be satisfactorily mitigated ○ The beneficial reuse of all wastes generated at the premises are maximised where it is safe and practical to do so ○ No waste disposal occurs on site except in accordance with an Environment Protection Licence ○ Ensure the environmental risks from hazardous chemicals and chemical waste are minimised. • The environmental assessment needs to identify the proposed type, quantity and location of wastes to be generated and/or stored at the site, and the means of lawful disposal of these wastes. Spill management measures, including items such as bunding, and emergency procedures should also be clearly outlined.	
WaterNSW	No response was received.	
MDBA	• Please note the environmental assessment should consider the flow, use, and control of the River Murray and potential impacts (direct or indirect) to water quality. Examples of considerations to address include (but are not limited to): management controls for drainage, sedimentation and erosion; contingencies/provisions (if required) for managing potential on-site contaminants (e.g. fuel); deployment of floating debris booms for construction waste capture; and any mitigations/ameliorations for potential vegetation disturbance (particularly on-bank). • The MDBA would also appreciate being kept abreast of development of the detailed design and general progress of the project, in consideration the work is being carried out within a reach of the River Murray where the MDBA supports a riparian work program in conjunction with Snowy Hydro Ltd.	Chapter 7 of this REF includes safeguards and management measures to protect and maintain the Murray River during the proposed work. MDBA's request to be kept abreast of development of the detailed design and general progress of the project has been noted.

Agency	Issue raised	Response
DOT Victoria	**Is the proposal an exempt activity?** • With reference to any requirement to prepare a Cultural Heritage Management Plan (CHMP), the proposed works are considered exempt under r.15(2)(a) of the *Aboriginal Heritage Regulations*, as works on, over or under an existing roadway; under r.15(2)(b) and as maintenance or repair works associated with an existing high impact activity. Therefore, a mandatory CHMP is not triggered. **Should a voluntary CHMP by undertaken?** • To determine whether a voluntary CHMP might be an appropriate option to manage any risk to Aboriginal cultural heritage, the Victorian Aboriginal Heritage Register (VAHR) was accessed on 9th August 2021 and indicated that the works are not located in a defined area of cultural heritage sensitivity under the *Aboriginal Heritage Regulations* 2018. This is primarily because the proposed works are contained within the existing road formation, adjacent cutting and fill batter, and areas that have been otherwise previously and significantly disturbed. • Therefore, the potential risk to Aboriginal cultural heritage values, in this instance, is considered very low to nil and there is no requirement to prepare a voluntary CHMP.	Noted. Aboriginal heritage impacts are discussed Section 6.3 of this REF.
DELWP	• Heritage Victoria administers the *Heritage Act 2017* which offers statutory protection to places and objects which have State level heritage significance. It can be confirmed the bridge Replacement on Towong Road is not registered in the State Victorian Heritage Register therefore it does not fall within Heritage Victoria's jurisdiction.	Noted.
NECMA	No response was received.	

6 Environmental assessment

This section of the REF provides a detailed description of the potential environmental impacts associated with the construction and operation of the proposal. All aspects of the environment potentially impacted upon by the proposal are considered. This includes consideration of the factors specified in the guidelines *Is an EIS required?* (DUAP, 1995/1996) as required under clause 228(1) of the Environmental Planning and Assessment Regulation 2000 and the *Marinas and Related Facilities EIS Guideline* (DUAP, 1996). The factors specified in clause 228(2) of the Environmental Planning and Assessment Regulation 2000 are also considered in Appendix B.

Site-specific safeguards and management measures are provided to mitigate the identified potential impacts.

6.1 Biodiversity

This section summarises the proposal's aquatic and terrestrial biodiversity, prepared in accordance with Environmental Impact Assessment Practice Note: Biodiversity Assessment (EIA-N06) (RMS, 2016b).

6.1.1 Methodology

Desktop review

The biodiversity assessment included a desktop review of published State and Commonwealth records, data and literature to confirm the likely presence of terrestrial and aquatic threatened flora, fauna and endangered communities within the locality footprint.

A 20 kilometre search radius was considered commensurate with the apparent number of records within the local area in the case of NSW and 10 kilometres in the case of Victoria.

The desktop review included the following:

- NSW Department of Planning, Industry and Environment – Environment, Energy and Science (DPIE-EES) vegetation information system (VIS) Classification
- NSW BioNet
- Victorian Biodiversity Atlas (VBA)
- NSW DPIE-EES threatened biodiversity data collection
- NSW Department of Primary Industries (DPI) Fish Communities and Threatened Species Distribution of NSW
- NSW DPI threatened species lists
- NSW DPI listed protected fish species
- Commonwealth Department of Agriculture, Water and the Environment (DAWE) (formerly DoE) Protected Matters Search Tool (PMST)
- Records of threatened species in the Atlas of Living Australia (ALA).

Areas protected by State and local environmental planning instruments (EPIs) due to their ecological significance (e.g. National parks/reserves, wetlands and other conservation areas and reserves) were identified using:

- Regional conservation plans prepared by the former NSW OEH
- Areas of Outstanding Biodiversity Value (AOBV) register
- NSW DPI critical habitat register
- NSW DPI key fish habitat maps
- Commonwealth DAWE Register of Critical Habitat
- Commonwealth DAWE Directory of Important Wetlands Australia (the Directory).

Field survey

A field survey of the study area was completed on 17 February 2021 to identify terrestrial and aquatic habitats, flora and fauna in the immediate area. The terrestrial and aquatic field survey confirmed the type, extent and condition of instream, riparian and/or floodplain vegetation identified in the desktop review. The survey also included a terrestrial and aquatic habitat assessment that focussed on habitats of potential threatened and migratory species. Instream vegetation and habitat was identified from the banks, the bridge and shallow areas that could be safely accessed by wading. Opportunistic fauna sightings were recorded during the field survey. Eight collapsible bait traps (30 centimetre by 15 centimetre by 15 centimetre with a 3 centimetre diameter entrance) were deployed along the river edge. These traps target small size fish and aquatic crustaceans.

During the survey, flow and water levels within the river appeared above average. This would have obscured some habitat features though likely habitats present was inferred based on our experience with similar rivers.

Likelihood of occurrence

The likelihood of occurrence of each threatened or migratory species, threatened population or ecological community based on the findings of the desktop review and field survey was made based on the criteria in Table 6-1.

For the basis of the impact assessment, species, populations and communities are also considered present when there is a moderate to high likelihood of occurrence.

Table 6-1: Likelihood of occurrence criteria for the study area (50 metres either side of Towong Bridge)

Likelihood	Criteria
Recorded	The species was observed in the study area during the current survey
High	It is highly likely that a species inhabits the study area and is dependent on identified suitable habitat (i.e. for breeding or important life cycle periods such as winter flowering resources) and has been recorded recently (within 20 years) in the locality. Is known or likely to maintain resident populations in the study area.

Likelihood	Criteria
	Also includes species known or likely to visit the study area during regular seasonal movements or migration.
Moderate	Potential habitat is present in the study area. Species unlikely to maintain sedentary populations, however may seasonally use resources within the study area opportunistically or during migration. The species is unlikely to be dependent (i.e. for breeding or important life cycle periods such as winter flowering resources) on habitat within the study area, or habitat is in a modified or degraded state. Includes cryptic flowering flora species that were not seasonally targeted by surveys and that have not been recorded. The proposal footprint contains habitat features or components associated with the species
Low	It is unlikely the species inhabits the study area and has not been recorded recently in the locality. It may be an occasional visitor, but habitat similar to the study area is widely distributed in the local area, meaning the species is not dependent (i.e. for breeding or important life cycle periods such as winter flowering resources) on available habitat. Specific habitat is not present in the study area or the species are a non-cryptic perennial flora species that were specifically targeted by surveys and not recorded.
None	Suitable habitat is absent from the study area.

Impact assessment

The impact assessment was prepared in accordance with *Environmental Impact Assessment Practice Note: Biodiversity Assessment (EIA-N06)* (RMS, 2016d) with consideration of the:

- Biodiversity Guidelines: Protecting and Managing Biodiversity on RTA Projects (RTA, 2011)
- Guidelines for Biodiversity Offsets (RMS, 2016a).

A Test of Significance (ToS) under the *Biodiversity Conservation Act 2016* (BC Act), Assessment of Significance (AoS) under the *Fisheries Management Act 1994* (FM Act)) and/or consideration against Significant Impact Criteria (SIC) under the *Environment Protection and Biodiversity Conservation Act 1999* (EPBC Act) for

species considered ‘likely to occur’ (i.e. moderate or high likelihood of occurrence or recorded) by the habitat assessment has been completed for each listed threatened species.

6.1.2 Existing environment

Geographic context

The existing Towong Bridge crosses the Murray River at the border of NSW and Victoria 80 kilometres east of Albury at Towong. The source of the Murray River is approximately 100 kilometres upstream at Cowomba Flat with major tributaries near Towong including Swampy Plain River 10 kilometres upstream, Corryong Creek and Tooma River 10 kilometres downstream. The Hume Dam about 100 kilometres downstream is a major barrier to fish passage from the mid and lower reaches of the river.

Aquatic

Habitat

The Murray River within the study area provides substantial aquatic habitat. At the crossing it is relatively narrow (20 metres across) though up to about 50 metres across within approximately three square metres upstream and downstream

Aquatic habitat included deeper slow flowing pools with faster flowing water on the outside of meanders. During lower flows there would be shallower sections potentially with riffles. Areas of sand/gravel appeared to be present in aerial imagery just upstream of the crossing. There was a narrow riparian strip 50 metres upstream and downstream that was broken in places though it would provide a source of in-stream woody debris (Figure 6-2, Plate 1c).

Isolated pools and apparent old meander channels disconnected from the existing channels are located upstream just outside of the study area. The channel morphology is sinuous with no evidence of major bank reinforcement or re-sectioning work in the study area except around the bridge embankments where gabions have been installed.

River substratum around the bridge structure appeared to consists primarily of sand and silt, though substratum further than a few metres from the bank was not visible. The existing bridge piles (Figure 6-2, Plate 1d and Figure 6-3, Plate 1e) would provide some aquatic habitat and offer refuge from water flow. No in-stream or emergent aquatic plants were observed, though may have been present below the surface.

The Murray River is mapped Key Fish Habitat (KFH). The larger wood debris provides Type 1 – Highly Sensitive KFH, as would any large rocks and any aquatic plants.

Figure 6-1: Plate 1 aquatic habitat looking a) upstream and b) downstream in the study area.

Figure 6-2: Plate 1 (continued) aquatic habitat including c) wood debris and d) existing bridge structure in the study area.

Figure 6-3: Plate 1 (continued) e) existing bridge structure in the study area and f) *Macrobrachium* sp.

Solid surfaces such as wood debris and rocks provide a substratum upon which fish including Murray Cod would lay their adhesive eggs.

Key Fish Habitat

At a broad scale, NSW DPI maps showing the distribution of key fish habitats indicate the Murray River in the study area is KFH. It is also considered Type 1 – Highly Sensitive KFH according to NSW DPI Policy and *Guidelines for Fish Habitat Conservation and Management* (NSW DPI, 2013). This is due primarily to records of listed threatened fish species (Murray Cod) and large wood debris. Large rocks and native aquatic plants, if present, would also provide Type 1 – Highly Sensitive KFH

Flora and Fauna

A review of the occurrence of species of fish and crayfish in the upper Murray River Catchment was carried out previously by Cardno (2019). This included the Murray River from its headwaters downstream to Hume Reservoir including the Swampy Plains River catchment below Khancoban dam wall, but not the catchment upstream of Khancoban dam wall.

This review identified 22 species with records from the Murray River and/or its tributaries upstream of Hume Dam (refer to Table 6-2). Five species are listed as threatened in NSW and or Victoria (see below). Notable non-threatened native species include Golden Perch (*Macquaria ambigua*), which is a popular recreational species. There is a 2008 record of Golden Perch from Murray River 50 kilometres downstream of the study area and this species was stocked 15 kilometres downstream in the Murray River in 2012/2013 and 30 kilometres downstream at Jingellic in 2017/2018 (NSW DPI 2021a). Brown Trout (*Salmo trutta*) was also stocked at Towong and Rainbow Trout (*Oncorhynchus mykiss*) five kilometres upstream in 2019/2020.

There are records from 2005 and 2008 of the BS Act notifiable non-native Redfin Perch (*Perca fluviatilis*) in Corryong Creek and Tooma River, respectively, within 10 kilometres of the study area and in 2011 from the Murray River 15 kilometres downstream.

Table 6-2: Species of fish and crayfish with records from the Murray River Catchment upstream of Hume Dam

Threatened Species		
Family	**Scientific Name**	**Common Name**
Percichthyidae	*Macquaria australasica*	Macquarie Perch
Percichthyidae	*Maccullochella macquariensis*	Trout Cod
Percichthyidae	*Maccullochella peelii*	Murray Cod
Percichthyidae	*Nannoperca australis*	Southern Pygmy Perch
Galaxiidae	*Galaxias rostratus*	Flathead Galaxias
Parastacidae	*Euastacus armatus*	Murray crayfish

Non-threatened Native Species		
Family	**Scientific Name**	**Common Name**
Percichthyidae	*Macquaria ambigua*	Golden Perch
Percichthyidae	*Gadopsis marmoratus*	Northern River Blackfish

Percichthyidae	*Gadopsis bispinosus*	Two-spinned blackfish
Galaxiidae	*Galaxias olidus*	Mountain Galaxias
Galaxiidae	*Galaxias brevipinnis*	Climbing Galaxias
Galaxiidae	*Galaxias arcanus*	Riffle Galaxias
Retropinnidae	*Retropinna semoni*	Australian Smelt
Eleotridae	*Philypnodon grandiceps*	Flathead Gudgeon
Eleotridae	*Philypnodon macrostomus*	Dwarf Flathead Gudgeon
Eleotridae	*Hypseleotris* spp.	Carp Gudgeons
Parastacidae	*Cherax* spp.	Common Yabbies

Non-Native Species		
Family	**Scientific Name**	**Common Name**
Percidae	*Perca fluviatilis*	Redfin Perch
Poeciliidae	*Gambusia holbrooki*	Eastern Gambusia
Cyprinidae	*Carassius auratus*	Wild Goldfish
Cyprinidae	*Cyprinus carpio*	Carp
Salmonidae	*Oncorhynchus mykiss*	Rainbow Trout
Salmonidae	*Salmo trutta*	Brown Trout

Aquatic pests known from the Upper Murray River include:

- Redfin Perch
- Carp
- Wild Goldfish
- Oriental weatherloach
- Eastern Gambusia.

Aquatic diseases known from the Upper Murray River

- Epizootic ulcerative syndrome (EUS)
- Epizootic Haematopoietic Necrosis Virus (EHNV).

Terrestrial

Habitat

The study area provides limited terrestrial habitat features to which may be used by native fauna species in the area (Table 6-3). Habitat values included predominately exotic canopy species with small pockets of native vegetation community. Anthropogenic built structures including the existing also may provide habitat for native fauna such as microbats (Figure 6-4, Plate 2a and b).

Table 6-3: Fauna habitat values

Habitat Feature	Occurrence in the study area
Hollow-bearing Trees	Trees within the study area have the potential to provide tree hollows. These tree hollows have the potential to provide habitat to a number of fauna groups, such as microbats, birds, small arboreal mammals and

Habitat Feature	Occurrence in the study area
	reptiles. However, tree hollows were not identified in trees within the study area.
Stags	Stags were present in the study area. Stags provide suitable habitat for several groups of animals, including birds, bats and reptiles.
Logs	Fallen trees and branches were present in the study area on land and in the Murray River (also known as snags). Logs provide habitat and temporary refuge to fauna species (e.g. reptiles, amphibians and insects).
Burrows, nests and other fauna made habitat	Bird nests were observed along in trees central to the study area – likely to be occupied by small common bird species. Termite/ant mounds were not present within the study area.
Man-made fauna habitat	The existing bridge structure provides potential habitat for native fauna species including microbats.
Aquatic Habitat	Numerous waterbodies are visible in aerial imagery from the Locality, though none were present within the study area. One was present just northeast of the study area. These waterbodies would provide refuge for migrating bird species and livestock and their presence in the locality could be expected to influence the types and numbers of species in the study area. The Murray River also runs through the study area.

Vegetation

Desktop investigations using the Riverina Region vegetation mapping (VIS_ID 4469) (OEH, 2016) indicated one plant community type (PCT) expected to occur within the study area:

- PCT 5 - River Red Gum herbaceous-grassy very tall open forest wetland on inner floodplains in the lower slopes sub-region of the NSW South Western Slopes Bioregion and the eastern Riverina Bioregion.

Vegetation present within the study area was predominately exotic canopy species and mix agricultural and recreational grassland. A small portion of remnant native vegetation community (PCT 5) exists within the study area, however in a highly modified/disturbed condition. Canopy species in this zone included River Red Gum (*Eucalyptus camaldulensis*) with a sparse native middle stratum which includes Silver Wattle (*Acacia dealbata*). Groundcover was dominated by exotic species including Plantago (*Plantago lanceolata*) and Purpletop (*Verbena bonariensis*). In total, 0.04 ha of PCT 5, 0.25 ha of native/exotic woody vegetation and 1.07 ha of exotic grassland is present within the construction area.

The study area (Figure 6-5 and Figure 6-6, Plate 3a to d) includes a campground along the northern bank of the Murray River. Vegetation in this area included mown/managed grass and planted exotic trees including London Plane Tree (*Platanus acorifolia*) and Eastern Cottonwood (*Poplar deltoides*). Weeping Willow (*Salix babylonica*) were also present in the riparian strip.

There were small pockets of remnant vegetation along fence lines and riparian strip including some large eucalypt trees. Native groundcover species are scattered throughout the cleared land, however, the extent of the native vegetation does not constitute derived native grassland and a PCT was not attributed to this area. Figure 6-7 identifies ground-truthed vegetation encountered during the field survey

Figure 6-4: Plate 2 a) and b) potential man-made fauna habitat provided by the existing bridge structure.

Figure 6-5: Plate 3 a) and b) Terrestrial habitats within the study area.

Figure 6-6: Plate 3 (continued) c) and d) Terrestrial habitats within the study area.

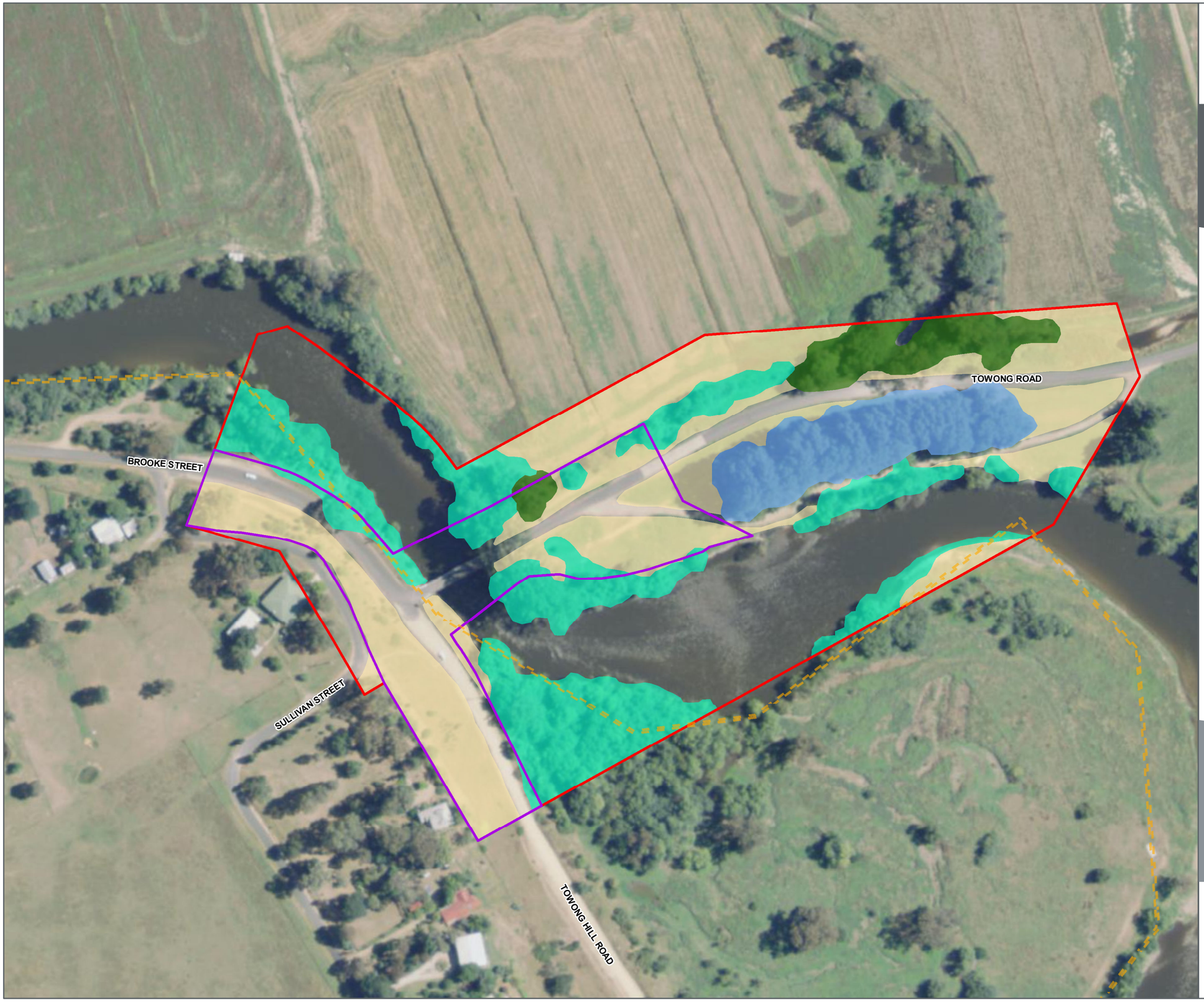

NSW GOVERNMENT

Vegetation

TOWONG BRIDGE REPLACEMENT PROJECT

Legend

- REF study area
- Construction boundary
- State Border (Esri, 2016)

Ground-truthed vegetation

- PCT 5
- Planted exotic
- Exotic vegetation
- Exotic grassland

FIGURE 6-7

1:2,000 Scale at A3

m
0 25 50 75 100

N

Map Produced by Cardno NSW/ACT Pty Ltd (NNSW)
Date: 2021-06-29 | Project: 80021046
Coordinate System: GDA 1994 MGA Zone 55
Map: 80021046-GS-004-GroundtruthVegetation.mxd 01
Aerial Imagery supplied by NSW SS

Table 6-4 summarises the vegetation present within both the construction boundary and Study Area and the approximate area they occupy on both the NSW extent and VIC extent of the Study Area.

Table 6-4: Ground-truthed vegetation within the Study Area

Vegetation Type	Plant Community Type (PCT)	Area within Study Area (ha)	Area within Construction Boundary (ha)
River Red Gum herbaceous-grassy very tall open forest wetland on inner floodplains in the lower slopes sub-region of the NSW South Western Slopes Bioregion and the eastern Riverina Bioregion	PCT 5	NSW - 0.39	NSW - 0.04
Exotic Vegetation	NA	NSW - 1.62 VIC – 0.19	NSW – 0.19 VIC – 0.06
Exotic Grassland	NA	NSW – 1.16 VIC – 1.09	NSW – 0.41 VIC – 0.66
Planted Exotic	NA	NSW - 0.66	-
	Total	5.11	1.36

All native vegetation communities within the Study Area occupies the NSW portion of the Study Area. No native vegetation community was detected from the VIC portion of the Study Area.

Flora and fauna species

A total of 32 flora species were recorded within the study area, including 10 native species (31 per cent) and 22 exotics (69 per cent) across 19 families (Appendix D). The most diverse families were *Poaceae* (6 species) and *Asteraceae* (4 species). None of which are listed under the BC Act and/or EPBC Act.

A total of 22 exotic species were recorded within the study area during site inspections, six of which have been listed at a State and/or Commonwealth level (refer to Table 6-5). The following identifies weed categorisation and legislative context of each species:

- Priority Weed (PW) – Identified within the local government area (LGA) under the NSW *Biosecurity Act 2015* (Biosecurity Act). Each species identified has specific biosecurity duties to be considered
- Weeds of National Significance (WoNS) – Identified by the Commonwealth Government
- High Threat Exotics (HTE) – Identified under the Biodiversity Assessment Method (BAM) under the BC Act.

Table 6-5: State and/or Commonwealth listed exotic species

Species Name	Common Name	Legislative Context		
		PW	WoNS	HTE
Asparagus aethiopicus	Asparagus Fern	✓	✓	✓

Species Name	Common Name	Legislative Context		
		PW	WoNS	HTE
		Prohibition on dealings: Must not be imported into the State or sold		
Cyperus eragrostis	Umbrella Sedge	-	-	✓
Paspalum dilatatum	Paspalum	-	-	✓
Pyracantha angustifolia	Orange Firethorn	-	-	✓
Rubus fruticosus	Blackberry	✓ Prohibition on dealings: Must not be imported into the State or sold.	✓	✓
Salix spp.	Willow	✓ Prohibition on dealings: Must not be imported into the State or sold.	✓	✓

Sixteen species of bird and three species of reptile were seen and/or heard during the survey (Appendix D). No fauna listed under the BC Act and/or EPBC Act were detected during field surveys.

Threatened species, populations and communities

Aquatic

Threatened aquatic species with records in the surrounding region are provided (Appendix D) along with assessment of their Likelihood of Occurrence in the study area. The Likelihood of Occurrence assessment identified four fish with a moderate or high likelihood of occurrence in the study area:

- Murray Cod (*Maccullochella peelii*) listed as vulnerable under the EPBC Act and threatened under the FFG Act
- Southern Pygmy Perch (*Nannoperca australis*) listed as endangered under the FM Act
- Murray Crayfish (*Euastacus armatus*) listed as vulnerable under the FM Act and threatened under the FFG Act
- Flathead Galaxias (*Galaxias rostratus*) listed as critically endangered under the FM Act and EPBC Act and threatened under the FFG Act.

These species have either recent records (stocking records, in the case of Murray Cod) and/or a predicted distribution within the study area. None were observed during the site visit.

No threatened aquatic populations were identified. The Lower Murray River aquatic ecological community, listed as an endangered ecological community (EEC) under the FM Act, extends upstream as far as Hume Dam and does not occur in the study area or surrounding region.

Terrestrial

Threatened terrestrial ecological communities (TECs) and species, and migratory birds listed under the Japan-Australia Migratory Bird Agreement (JAMBA) and Republic of Korea-Australia Migratory Bird Agreement (ROKAMBA) species with records in the

locality are provided (Appendix D) along with assessment of their Likelihood of Occurrence in the study area. The Likelihood of Occurrence assessment identified four birds and three mammals with a moderate likelihood of occurrence in the study area:

- Eastern False Pipistrelle (*Falsistrellus tasmaniensis*) listed as vulnerable under the BC Act
- Large Bent-winged Bat (*Miniopterus orianae oceanensis*) listed as vulnerable under the BC Act
- Black Falcon (*Falco subniger*) listed as vulnerable under the BC Act
- Little Eagle (*Hieraaetus morphnoides*) listed as vulnerable under the BC Act and threatened under the FFG Act
- Gang-gang Cockatoo (*Callocephalon fimbriatum*) listed as vulnerable under the BC Act
- Varied Sittella (*Daphoenositta chrysoptera*) listed as vulnerable under the BC Act
- Platypus (*Ornithorhynchus anatinus*) listed as threatened under the FFG Act.

No records of threatened terrestrial species were identified within the study area and none were observed during the site visit.

Critical habitat and Areas of Outstanding Biodiversity Value (AOBV)

No critical habitats listed under the FM Act or EPBC Act or AOBVs listed under the BC Act occur within the Locality or study area.

Wetlands and other areas of conservation significance

Nearest RAMSAR wetland is 200 kilometres to 300 kilometres downstream (Barmah forest and NSW central Murray state forests) and 60 kilometres southeast (Blue Lake).

Key Threatening Processes (KTPs)

The following KTPs were identified with potential to be exacerbated by the proposal:

BC Act

- alteration to the natural flow regimes of rivers, streams, floodplains and wetlands
- clearing of native vegetation
- human-caused climate change
- infection of frogs by amphibian chytrid causing the disease chytridiomycosis
- loss and degradation of native plant and animal habitat by invasion of escaped garden plants, including aquatic plants
- loss of hollow-bearing trees
- removal of dead wood and dead trees

FM Act

- degradation of native riparian vegetation along NSW water courses
- human-caused climate change
- installation and operation of instream structures and other mechanisms that alter natural flow regimes of rivers and streams
- removal of large woody debris from New South Wales rivers and streams.

EPBC Act

- land clearance
- loss and degradation of native plant and animal habitat by invasion of escaped garden plants, including aquatic plants
- novel biota and their impact on biodiversity.

6.1.3 Potential impacts

Terrestrial

Potential impacts on terrestrial habitat, vegetation and/or fauna within the study area due to construction and operation of the bridge include:

- Potential disturbance to exotic and remaining native vegetation within the construction area. Site inspections revealed that vegetation in the study area was predominantly disturbed, though 0.04 ha of PCT 5 and 0.25 ha of mixed native/exotic woody vegetation occurs within the construction area. This included the campground area on the southeast bank, surrounding agricultural area and the limited remaining riparian strip consisting of mixed exotic and native species. It is not expected compound site establishment would require disturbance to the remaining riparian strip on the upstream section of the NSW bank where the compound would be established. The exact layout of the construction area is yet to be determined. Assuming it can be designed to avoid removal of any native vegetation impacts, associated impacts to PCT 5 would not be expected. Rehabilitation of disturbed areas following construction would also ensure any impact would be temporary.
- Demolition of the existing bridge structure which may provide sub-optimal habitat for native fauna including microbat species.
- Sediment mobilisation from areas of unconsolidated, exposed soil during compound establishment and bridge demolition and construction work. This could result in sedimentation in areas of native vegetation following run-off. Such impacts would be avoided by implementation of standard sediment control measures.
- Introduction of new weed species and pathogens and sediment into new areas due to run-off from unconsolidated, exposed soil during work.
- Increased noise, dust and light pollution within or adjacent to the study area, reducing fauna utility of this habitat.
- Entrapment of fauna during compound establishment and bridge construction work, such as excavations. This can result in fauna death or injury through drowning, burial and compaction or through interaction with excavation plant.
- Disturbance to fauna that may be using the current bridge structure as habitat.

Given the currently disturbed nature of native vegetation present in the study area, and implementation of the additional control and management measures to avoid potential impacts to native species, significant impacts to terrestrial vegetation and fauna due bridge demolition and construction are not expected.

Aquatic

Potential impacts on aquatic habitat, vegetation and/or fauna and within the study area due to construction and operation of the bridge include:

- There would not be any requirement to remove riparian vegetation to establish the compound. It is possible a very small amount of riparian vegetation (no more than 10 square metres and most likely far less) directly adjacent to the bridge structure may be disturbed to allow demolition and construction, however, the banks within this area would subsequently be restored by stabilising the embankment, contouring and planting with native species. Thus, impacts to the riparian corridor are expected to be temporary and not significant.
- Smothering of aquatic habitat due to sedimentation following mobilisation of sediments from terrestrial areas disturbed during compound establishment and bridge demolition and construction:
    - Elevated suspended sediments (SS) could also arise in the Murray River following mobilisation of sediments from areas disturbed during compound establishment and bridge demolition and construction. In general, increases in turbidity may affect the foraging behaviour of fish and suspended sediments may abrade the protective mucus coats on fish, thereby increasing their susceptibility to disease, or clog gill filaments and suffocate the fish (Johnstone, 1981). Construction would also generate noise which may disorientate fish. However, as there are large areas of similar habitat locally and no area would be isolated during construction. It is expected such impacts would be adequately managed by implementation of standard sediment controls. Such impacts would also be temporary with potential to occur during, and for a short term following, construction. The placement of scour protection at the banks adjacent to the abutments would prevent erosion and mobilisation of sediments from these areas.
- Direct disturbance to the river bed during bridge pile demolition and construction and due to placement of the construction and demolition plant on the river bed:
    - The area of disturbance due to the pile and plant placement represents a small area (likely no more than approximately three square metres) of river bed substratum. When placed in context of the availability of this river habitat in the study area, this represents a negligible loss of aquatic habitat in the river and negligible associated impacts to aquatic biota. The disturbance associated with plant placement would also be temporary.
- Scouring and/or erosion of the river bed and banks due to pile and abutment construction and temporary placement of construction / demolition plant on the river bed:
    - Installation of these structures could result in scouring of the river bed. This could mobilise sediments with associated impacts to aquatic habitats and biota downstream (see above). However, scouring of the river bed would like be localised to the immediate area and a few metres downstream, and would stabilise soon after placement. Scour protection placed at the abutments would mitigate potential erosion and scouring following construction. Based on this, no significant nor long-term impacts to aquatic habitat and biota due to placement of instream or bankside structures are expected. The proposed instream structures would not create a damming effect and there would not be any change to flow regime in the river. Similarly, the structures would not create a barrier to fish passage. Bridge crossings generally pose little problem to migrating fish if the morphology of the stream-bed and water flow patterns remains largely unaltered, as is the case for this proposal.

There would be a comparable number of bridge piles following bridge demolition and constriction, and the proposal is not expected to impact fish passage.

- Some removal of wood debris from the river may be required to facilitate bridge demolition and constriction, though this would be a very small proportion of wood debris present in the river and could be replaced in nearby sections. The rehabilitation of nearby riparian vegetation and the placement of additional wood debris in the river offers the potential to enhance aquatic habitat in this section of the Murray River. Thus, associated impacts to aquatic biota that use this habitat for refuge and as a reproductive substratum would therefore be negligible.

The Murray River within the study area is identified as key fish habitat (KFH), and provides Type 1 – Highly Sensitive KFH in the form of large wood debris and likely also large rocks and aquatic plants (turbidity at the time of the site inspection would have obscured many such habitat features).

There would be a minor and temporary impact to this KFH due to the proposal. Although some wood debris may be removed from the river during bridge demolition and construction, this would be a very small proportion of that present in the river. This wood debris could also be placed back into the river upstream or downstream along with additional wood debris due to any required tree removal. Thus, significant impacts to KFH are not expected.

Given the temporary and localised nature of the potential impacts to aquatic habitat and biota, and implementation of the additional standard control and management measures to avoid potential impacts to aquatic ecology, significant impacts to aquatic habitat and biota due to bridge demolition and construction are not expected.

Threatened species, populations and communities

AoS and consideration under SIC for aquatic species listed under the FM Act (Southern Pygmy Perch, Murray Crayfish and Flathead Galaxias) and EPBC Act (Murray Cod and Flathead Galaxias), respectively, are provided in Appendix D. The proposal would not result in significant impacts to these species and further assessment via a SIS or a referral are not recommended. Given the AoS for Murray Cod and Flathead Galaxias, also listed under the *Flora and Fauna Guarantee Act* 1988 (FFG Act), did not indicate a significant impact, further consideration via an EES is also not recommended. It is noted also that these species would be present only within the Murray River, which is located wholly within NSW.

ToS carried out for terrestrial species listed under the BC Act (two microbats and four birds) are provided in Appendix D**.** The proposal would not result in significant impacts to these species and further assessment is not recommended. Given the ToS for Little Eagle, also listed under the FFG Act, did not indicate a significant impact, further consideration via an environment effects statement (EES) is also not recommended.

Platypus (*Ornithorhynchus anatinus*) is listed as threatened under the FFG Act but not the BC Act, however, Significant impacts to Platypus due to the proposal are not expected and an EES is not recommended. Although Platypus have been recorded in the Locality and suitable habitat exists in the study area, no sign of Platypus (such as burrows) were observed during the site visit. Further, the proposal would disturb a small length (12 m at each of the two abutments) of potential Platypus habitat in banks either side of the river. Further searches for burrows carried out immediately before the start of work, and translocation of any individuals if present, would further reduce the potential for harm to this species and ensure significant impacts do not occur.

Key Threatening Processes

Table 6-6 details the KTPs which could arise from the proposal, as well as an assessment of the extent to which these KTPs would be exacerbated.

Table 6-6: KTP assessment

KTP (BC Act and FM Act)	KTP (EPBC Act)	Extent of KTP exacerbation
Anthropogenic Climate Change	Loss of climatic habitat caused by anthropogenic emissions of greenhouse gases	The proposal would contribute to greenhouse gas emissions through excavation activities and removal of vegetation. Due to the temporary nature of the project it is not considered likely to exacerbate this KTP.
Bushrock removal	-	The proposal is not expected to remove bushrock and is not considered a significant exacerbation of this KTP on the locality scale and would not impact naturally occurring rock resources.
Clearing of native vegetation	Land clearance	The proposal would result in the removal of a small portion of native vegetation. This impact is not considered a significant exacerbation of this KTP on the locality scale
Competition and grazing by the feral European rabbit	-	Rabbit was not observed within the study area. The proposal is not considered likely to lead to a significant increase in the local population of rabbit through processes such as the creation of a new, artificial food source
Infection of frogs by amphibian chytrid causing the disease chytridiomycosis	Infection of amphibians with chytrid fungus resulting in chytridiomycosis	There is a low risk that this pathogen could be introduced in unclean fill and untreated water running offsite. This is not considered a significant risk provided appropriate mitigation measures are enacted
Infection of native plants by *Phytophthora cinnamomi*	Dieback caused by the root-rot fungus (*Phytophthora cinnamomi*)	This pathogen may be introduced in unclean fill used on site and untreated water running offsite. This is not considered a significant risk provided appropriate mitigation measures are enacted
Introduction and establishment of Exotic Rust Fungi of the order Pucciniales pathogenic on plants of the family Myrtaceae	-	This pathogen may be introduced in unclean fill used on site and untreated water running offsite. This is not considered a significant risk provided appropriate mitigation measures are enacted
Invasion and establishment of exotic vines and scramblers	-	Exotic weed vine and scrambler species may be introduced as seed in unclean fill.

KTP (BC Act and FM Act)	KTP (EPBC Act)	Extent of KTP exacerbation
		This is not considered a significant risk provided appropriate mitigation measures are enacted
Invasion and establishment of Scotch Broom (*Cytisus scoparius*)	-	This species may be introduced as seed in unclean fill. This is not considered a significant risk provided appropriate mitigation measures are enacted
Invasion of native plant communities by African Olive *Olea europaea* subsp. *cuspidata* (Wall. ex G. Don) Cif	-	This species may be introduced as seed in unclean fill. This is not considered a significant risk provided appropriate mitigation measures are enacted.
Invasion of native plant communities by *Chrysanthemoides monilifera*	-	This species may be introduced as seed in unclean fill. This is not considered a significant risk provided appropriate mitigation measures are enacted.
Invasion of native plant communities by exotic perennial grasses	-	Exotic perennial grass species may be introduced as seed in unclean fill. The proposal is not considered likely to significantly exacerbate this KTP in the locality. This is not considered a significant risk provided appropriate mitigation measures are enacted.
Predation by the European Red Fox	Predation by European red fox	Fox was not observed to be present within the study area during field surveys. The proposal is not considered likely to lead to a significant increase in the local population of fox.
Removal of dead wood and dead trees	-	The proposal would require the removal of dead wood resources. This impact is not considered a significant exacerbation of this KTP on the locality scale.
Degradation of Native Riparian Vegetation along New South Wales Watercourses	-	Only a very small length (a fee 10s m) of riparian vegetation may be disturbed along the river banks. The vegetation that is present here is disturbed, and would be re-planted following work. Thus, exacerbation of this KTP is not expected.
Removal of Large Woody Debris from NSW Rivers and Watercourses	-	Removal of a small amount of woody debris may occur as part of the proposal. This would be replaced in the river during or following work and exacerbation of this KTP is not expected.
Installation of instream Structures and Mechanisms	-	Bridge demolition and construction would not impact the flow regime of the Murray

KTP (BC Act and FM Act)	KTP (EPBC Act)	Extent of KTP exacerbation
that alter Natural Flow; Alteration to Natural Flow Regimes of Rivers and Watercourses and their Floodplains and Wetlands		River and these KTPs would not be exacerbated.
Predation by eastern gambusia (*Gambusia Holbrooki*).	-	Although eastern gambusia are present in the Murray River, the proposal is not expected to result in an increase in the population size that might result in exacerbation of this KTP.

The proposal is not considered likely to lead to a significant exacerbation of any of the above KTPs.

Conclusion on significance of impacts

The proposal is not expected to significantly impact threatened species or ecological communities or their habitats, within the meaning of the EPBC Act, BC Act, FFG Act or FM Act and therefore a SIS, EES or Biodiversity Development Assessment Report is not required.

The proposal is not expected to significantly impact threatened species, ecological communities or migratory species, within the meaning of the EPBC Act. No KTPs listed under the FM Act, BC Act and/or EPBC Act would be exacerbated by the proposal.

Vegetation removal within Victoria as a result of this proposal is limited to exotics including grasses. Given the limited impact of the proposal within Victoria it is considered that no further investigations or permits are required for the vegetation removal associated with the proposal.

6.1.4 Safeguards and management measures

Table 6-7 lists the biodiversity safeguards and management measures that would be implemented to account for the impacts identified in **section 6.1.3**.

Table 6-7: Biodiversity safeguards and management measures

ID	Impact	Environmental safeguards	Responsibility	Timing
B1	Removal of native vegetation, habitat and habitat features	Sediment fencing installed below all areas of exposed soil during work. This would lead to the prevention of migration of unconsolidated soil into terrestrial and aquatic environments	Transport/ Contractor	Before construction
B2	Removal of native vegetation, habitat and habitat features	As the exact impact area and location of ancillary facilities have not yet been determined the construction boundary has been used to determine a maximum extent of vegetation pruning/clearing as a result of the Project. Approximately 0.29 ha of native/exotic woody vegetation (inclusive of 0.04 ha native vegetation community - PCT 5) and approximately 1.07 ha of exotic grassland fall within the construction boundary as illustrated in Figure 6-4. This boundary provides the maximum potential impacts to vegetation within the Study Area. It is recommended that the construction area layout be designed to avoid harm to or require the removal of any native trees. If required, trees/native vegetation must be pruned rather than removed where possible. Vegetation to be removed must be identified and limited to the work areas (i.e. no vegetation removal is permitted for establishment of the construction compound). No other native remnant vegetation is to be removed as a result of the project.	Transport/ Contractor	Before construction
B3	Removal of native vegetation, habitat and	Demolition of the bridge should be deconstructed methodically to ensure fauna entrapment/injury does not occur. Pre-clearing surveys will be carried out in accordance with Guide 1: Pre-clearing process of the *Biodiversity Guidelines: Protecting and managing*	Transport	Construction

ID	Impact	Environmental safeguards	Responsibility	Timing
	habitat features	*biodiversity on RTA projects* (RTA, 2011). Pre-commencement searches for burrows (including burrows of Platypus) should be carried out immediately before any work. Visual observation for potential microbat species utilising the sub-optimal habitat of the existing bridge structure would be carried out at dusk and prior to works commence in order to help confirm presence of microbat species. If fauna is observed, contact a suitably trained and qualified wildlife handler to carry out rescue and relocation. Injured or juvenile fauna are to be taken to a local veterinarian for assessment and treatment.		
B4	Aquatic impacts	Appropriate runoff controls such as sediment fencing can be installed before any soil disturbance work. Any exogenous soil and water used on site is to be appropriately treated to minimize the introduction of new pests and diseases.	Transport/ Contractor	Before construction
B5	Aquatic impacts	Dust minimisation through water suppression, avoiding work on high wind days and limiting dust generating activities to the extent possible.	Transport/ Contractor	Construction
B6	Noise and vibration, and light	Restricting work to daylight hours. Minimising the use of loud machinery whenever possible or containing such machinery within noise barriers. This will ensure minimal disturbance to sensitive fauna using habitat within the study area and adjacent lands.	Transport/ Contractor	Construction
B7	Removal of marine vegetation and habitat	Any wood debris (greater than 30 cm in diameter or 3 m in length) required to be removed to enable demolition and construction should be placed back into the river upstream or downstream of the river. Otherwise, wood debris should be stockpiled and replaced in the river following completion of work.	Transport/ Contractor	Construction/post-construction
B8	Invasion and spread of weeds, pests and diseases	Weed species will be managed in accordance with Guide 6: Weed management of the *Biodiversity Guidelines: Protecting and managing biodiversity on RTA projects* (RTA, 2011).	Transport/ Contractor	Construction
B9	Aquatic impacts	Disturbance and mobilisation of sediments from the river channel could be minimised by placing a temporary work platform (e.g. concrete blocks) on the river bed. The use of silt curtains would likely not be practicable or effective in a flowing watercourse.	Transport/ Contractor	Construction

6.2 Non-Aboriginal heritage

This section summarises the proposal's non-Aboriginal heritage impacts. Appendix D contains a supporting technical paper (*Statement of Heritage Impact*, SOHI) prepared by Austral Archaeology (Austral, 2021).

Section 5.4 contains consultation with Department of Environment, Land, Water and Planning (DELWP) – Heritage regarding matters of heritage within Victoria.

6.2.1 Methodology

This SoHI has been prepared in accordance with the guidelines outlined by the Heritage Office, now Heritage NSW, Department of Premier and Cabinet (Heritage NSW, DPC), and Department of Urban Affairs and Planning in the document *Statements of Heritage Impact as part of the NSW Heritage Manual*. This SoHI has been prepared in accordance with the principles contained in the most recent edition of *The Burra Charter: The Australian ICOMOS Charter for Places of Cultural Significance*.

Heritage listed items within and in the vicinity of the construction footprint were identified through a search of the relevant state and federal statutory and non-statutory heritage registers, including:

- Commonwealth Heritage List (CHL)
- National Heritage List (NHL)
- State Heritage Register (SHR)
- Victorian Heritage Register (VHR)
- Section 170 Heritage and Conservation Registers (S170 Register)
- *Tumbarumba Local Environmental Plan 2010 (*Tumbarumba LEP)
- *Tumbarumba Development Control Plan 2011 (*Tumbarumba DCP)
- NSW State Heritage Inventory (SHI)
- Victorian Heritage Inventory (VHI)
- Register of the National Trust of Australia (NSW) (RNTA).
- Royal Australian Institute of Architects (RAIA) 20th Century Register of Significant Buildings
- Art Deco Society of NSW Art Deco Building Register.

A site inspection was conducted on 25 February 2021. The aim of the site inspection was to inspect the area of proposed impacts to inform a preliminary assessment of archaeological potential and to identify heritage items in the vicinity of the construction footprint that may be affected by the proposal. The inspection was carried out on foot and a photographic record was made.

6.2.2 Existing environment

Towong Bridge historical background

Public desire for the construction of a bridge at Towong over the Murray River in the early years of the 20th century peaked following a number of fatalities at this section of the Murray River.

The Minister for Lands for NSW announced in 1936 a proposal for plans for a bridge over the Upper Murray at Towong. The Department of Main Roads began construction of the new timber beam bridge at Towong on 9 December 1937, and the bridge was proposed to be 53 metres in length.

The 5-span timber beam bridge, with each span measuring 10.5 metres in length, was officially opened to traffic on 28 October 1938.

Several alterations to the structure of the bridge were made during the second half of the 20th century, including modifications made to the piles in 1960, which included the strengthening of irons and adjustments to bracing, and a new approach span was added in 1975 to the Victorian side of the bridge and increasing the number of spans to six. The span added in 1975 consisted of concrete footings in addition to the timber piles and was shorter than the original five spans, measuring 6.5 metres in length.

In 2015 a steel beam on the upstream side of the timber deck was added for maintenance work, however was removed later in that year. In 2016, the structure was closed for an extended period while a temporary pier and abutment support was installed for T44 vehicle loads (44 tonne semi-trailers) in order to extend the life of the bridge by up to five years (Austral, 2021).

Listed heritage items

The study area is listed as a heritage item on the Tumbarumba LEP as ‘Towong Bridge over Murray River’ (Item No. I21), and under section 170 on the Roads and Maritime Heritage and Conservation Register as ‘RTA Bridge No. 5947’.

Significance

Towong Bridge is of local historical significance as it represents a major piece of road infrastructure on an important local transport route. Following its construction by the Department of Main Roads in 1938, Towong Bridge has provided a connecting link for those travelling between local towns in NSW and Victoria. The structure is widely recognised by the local community as a landmark and a structure of interest that provides a link between townships as well as 2 different states.

Towong Bridge consists of rare technical significance, representing the only functioning timber beam bridge that crosses the Murray River.

While Towong Bridge is considered to meet Heritage Significant Criteria on a local level the bridge piers and supports are in poor structural conditions. The general timber structure of the bridge is significantly deteriorated, particularly the piers, which are severely decayed. As a result, the bridge is no longer suitable to be retained and is considered a potential safety risk. Therefore, the dilapidated conditions of the bridge have had detrimental effects on the heritage value of the item (Austral, 2021).

6.2.3 Potential impacts

While Towong Bridge is considered to meet Heritage Significant Criteria on a local level, the bridge piers and supports are in poor structural condition.

Following a review of the historical background of the study area and the proximity of the study area to the level of the river, the SoHI determined that no historical archaeological remains are likely to occur in the area of work.

The Heritage Manual guidelines ‘*Statements of Heritage Impact’* includes a series of questions that must be answered based upon the nature of the anticipated impacts to frame the nature of potential impacts upon a heritage item. Assessment questions for the demolition of a building or structure was used to ascertain acceptability of the proposal. The assessment concluded that retention and adaptive re-use of the bridge

was not possible as it would not be able to meet the safety standards necessary for the continued use of the bridge, nor was retention of the structure as-is without use considered safe. Additionally, given previous works have been completed to extend the lifetime of the structure, postponing demolition at this time is also considered unsafe. Overall, considering the inability to improve the safety standards for the continued operation of the bridge, the SoHI concludes it is necessary to remove the bridge (Austral, 2021).

6.2.4 Safeguards and management measures

Table 6-8 lists the non-Aboriginal safeguards and management measures that would be implemented to account for the impacts identified in section 6.2.3.

Table 6-8: Non-Aboriginal safeguards and management measures

ID	Impact	Environmental safeguards	Responsibility	Timing
H1	Archaeological significance	Before the start of any construction or demolition work, the results of the site inspection (as described in Appendix E) should be outlined in the form of an archival recording prepared in accordance with Heritage Branch guidelines 'How to Prepare Archival Records for Heritage Items and Photographic Recording of Heritage Items Using Film or Digital Capture' (Heritage Office 1998), which is included in Appendix E.	Transport/Contractor	Construction
H2	Archaeological significance	If unexpected 'relics' are encountered during excavation, a Section 146 relics notification will be forwarded to Heritage NSW, DPC. 'Relics' cannot be impacted without appropriate approvals under the *Heritage Act 1977*.	Transport/Contractor	Construction
H3	Unexpected finds	The Roads and Maritime *Unexpected Heritage Item Procedure 2015* will be implemented if unanticipated heritage items or depositions are located during construction.	Transport/Contractor	Construction

6.3 Aboriginal cultural heritage

This section summarises the proposal's Aboriginal heritage impacts. Appendix E contains a supporting technical paper (Aboriginal Desktop Risk Assessment, ADRA) prepared by Austral Archaeology (Austral, 2021a) which is in accordance with Stage 1 of the Roads and Maritime Services Procedure for Aboriginal Cultural Heritage Consultation and Investigation (PACHCI) (RMS, 2011).

6.3.1 Methodology

The assessment included a desktop review of published records, data and literature, including a records search of the Aboriginal Heritage Information Management System (AHIMS) to confirm the presence of values in the local area.

6.3.2 Existing environment

The ADRA assessed the Aboriginal cultural heritage potential of the proposal location based on the following considerations:

- the AHIMS search indicated three known Aboriginal archaeological sites within 10 kilometres of the proposal but no sites within in the immediate study area
- the study area shows limited potential for Aboriginal cultural material to be present within the study area
- background research showed that the Murray River was culturally significant however the presence of frequently scored floodplains and levels of disturbance caused by the construction and ongoing use of the bridge are likely to have caused significant levels of disturbance which would have removed all evidence of Aboriginal cultural material from the within the study area
- the Aboriginal cultural heritage potential of the study area appears to be severely reduced due to past disturbance from flooding and erosion
- as a result of different legislative requirements to view the Victorian Aboriginal Heritage Register database, the details of the registered aboriginal sites on the Victorian side could not be accessed prior to this assessment.

6.3.3 Potential impacts

The proposed work is unlikely to result in harm to Aboriginal objects and sites, as the work is limited to the existing bridge site and along previously disturbed landform as a result of flooding and erosion which have reduced the potential for Aboriginal cultural material in the vicinity. The ADRA completed for the proposal concluded the proposal was unlikely to have an impact on Aboriginal cultural heritage within NSW and did not require further investigations or assessment (Austral, 2021a).

Additionally, construction works are expected to occur on the Victorian side, however any excavation would be limited to within the existing road reserve (which is considered to be a disturbed environment) and the only works outside the existing road reserve would be the establishment of a construction compound which would not require subsurface excavation and therefore presenting low risk to the identified culturally sensitive area.

Given the above, it is considered that works within the Victorian boundary is unlikely to impact on Aboriginal cultural heritage. The proposed works are considered exempt

under regulation15(2) of the Aboriginal Heritage Regulations 2018 as they consist of works on, over or under an existing roadway and under regulation15(2)(b) as maintenance or repair works associated with an existing high impact activity and therefore no further investigation is required..

6.3.4 Safeguards and management measures

Table 6-9 lists the Aboriginal heritage safeguards and management measures that would be implemented to account for the impacts identified in section 6.3.3.

Table 6-9: Aboriginal heritage safeguards and management measures

ID	Impact	Environmental safeguards	Responsibility	Timing
AH1	Aboriginal heritage	In the event that construction plans are altered, specifically in regards to the event that requires excavation work in relation to the establishment of a site compound, a Cultural Heritage Management Plan (CHMP) is required to be prepared in accordance with the Victorian *Aboriginal Heritage Act 2006*.	Transport/Contractor	Pre-construction / Construction
AH2	Unexpected heritage finds	The *Unexpected Heritage Items* (RMS, 2015) procedure will be followed in the event that (an) unknown or potential Aboriginal object(s), including skeletal remains, is/are found during construction. This applies where Transport does not have approval to disturb the object(s) or where a specific safeguard for managing the disturbance (apart from the procedure) is not in place. Work will only restart once the requirements of that procedure have been satisfied.	Transport/Contractor	Construction

6.4 Transport and traffic

This section describes the land and maritime based traffic, transport and access impacts associated with the proposal.

6.4.1 Methodology

A qualitative assessment of transport, traffic and access was performed and considers the following:

- desktop assessment of existing transport options near the proposal
- evaluation of construction and operation impacts to transport.

Given the very low quantity of traffic volume, one lane each way was considered sufficient. This is an improvement of the existing one lane bridge both in terms of traffic flow and safety – particularly for heavy vehicles. Existing environment

The existing Towong Bridge is a key link between NSW and Victoria for the local community and interstate and regional travellers. It is used by local traffic as well as through-traffic from regional NSW and Victoria.

The nearest alternative Murray River crossing connecting NSW to Victoria is Bringenbong Bridge to the south-east of the proposal site. This alternative route is about 24.6 kilometres by road and takes road users via Towong Road, Tooma Road and Alpine Way in NSW to connect to Murray Valley Highway, Murray River Road and Brooke Street in Victoria.

No bus routes or other forms of public transportation operate within the vicinity of the proposal.

6.4.2 Potential impacts

Towong Bridge would be closed to all traffic from the start of work for the demolition of the existing bridge to the completion of construction of the replacement bridge. The overall duration of work would be approximately 10 months and commence in early 2022.

A 20-kilometre detour via Bringenbrong Bridge would be in place during construction of the proposal (refer to

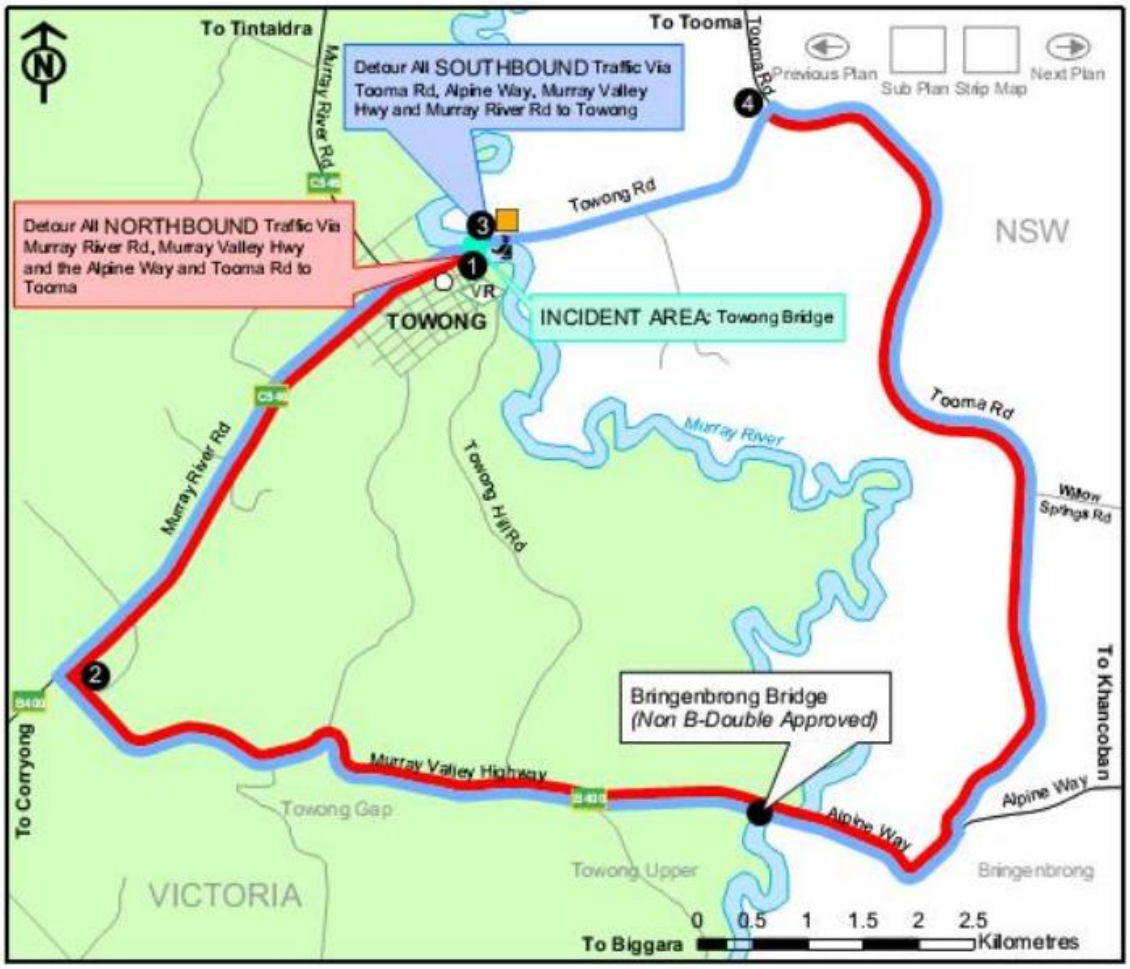

Figure 6-8).

Notification and consultation would occur with relevant groups and road users before any bridge closures. A road occupancy licence (ROL) and memorandum of authorisation (MOA) would be obtained before road or lane closures.

Access for construction vehicles to the proposal site would likely occur via Towong Road.

Navigation within the Murray River at this location would be temporarily unavailable for the duration of the demolition of the existing bridge and construction of the replacement bridge.

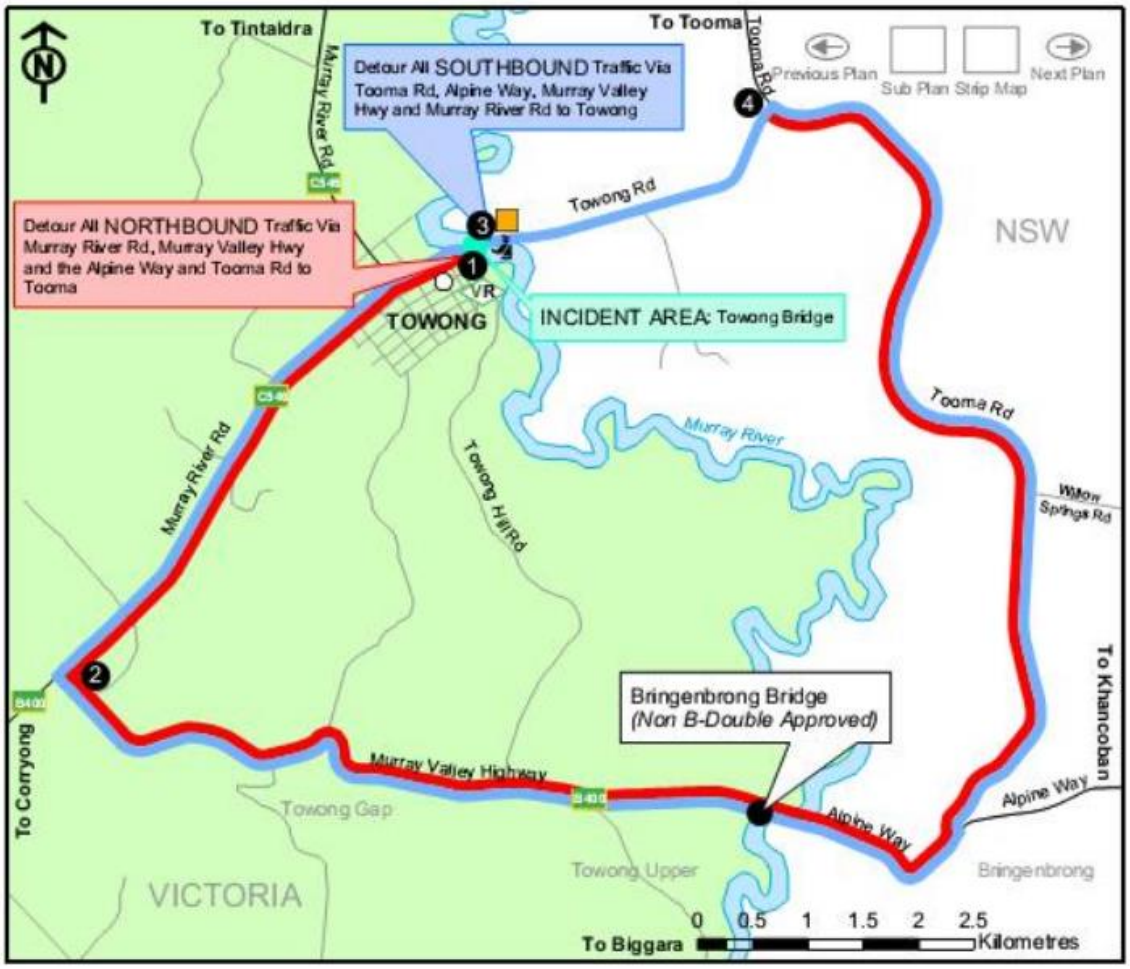

Figure 6-8: Detour via Bringenbrong Bridge (RMS, 2016)

6.4.3 Safeguards and management measures

Table 6-10 lists the transport, access and parking safeguards and management measures that would be implemented to account for the impacts identified in section 6.4.2.

Table 6-10: Land transport, access and parking safeguards and management measures

ID	Impact	Environmental safeguards	Responsibility	Timing
T1	Land transport and parking	A Traffic Management Plan (TMP) will be prepared and will include the following. • Detour information during demolition of existing bridge and construction of replacement bridge.	Transport/Contractor	Pre-construction
T2	Land transport and parking	A road occupancy licence (ROL) must be obtained prior to road or lane closures and a Section	Transport/Contractor	Pre-construction

ID	Impact	Environmental safeguards	Responsibility	Timing
		138 permit must be obtained prior to works commencing.		
T3	Water transport	TfNSW must adhere to the requirements of Part 6, Division 2 of the *Roads Act 1993* prior to the commencement of construction of a bridge or tunnel across navigable waters.	Transport/Contractor	Pre-construction

6.5 Noise and vibration

This section summarises the proposals noise and vibration impacts. Appendix F contains a supporting technical paper (Operational Noise Impact Assessment, ONIA) prepared by Cardno (Cardno, 2021).

6.5.1 Methodology

The operational noise study area was determined in accordance with the Roads and Maritime Noise Criteria Guideline (NCG) (Roads and Maritime, 2015). Noise levels during operation were predicted using 3D noise modelling software (SoundPLAN). As noise monitoring has not been carried out for the proposal, verification of the model was not conducted.

The assessed subject roads include Towong Road, which changes to Brookes Street south of Towong Bridge. The adopted operational noise study area includes all sensitive receivers located within 600 metres of the centreline of the outermost lanes of the proposal.

The predicted modelling results were used as the basis to produce noise prediction scenarios at all potentially affected receivers for the year 2023 (year of opening).

The assessment considers the following policies and guidelines:

- *DECCW Road Noise Policy* (DECCW, 2011) (RNP)
- *Roads and Maritime At-Receiver Noise Treatment Guideline* (Draft) (Roads and Maritime, 2017) (ARNTG)
- *Roads and Maritime Noise Criteria Guideline* (Roads and Maritime, 2015) (NCG)
- *Roads and Maritime Noise Mitigation Guideline* (Roads and Maritime, 2015) (NMG)
- *Roads and Maritime Noise Model Validation Guideline* (Roads and Maritime, 2018) (NMVG)
- *RTA Environmental Noise Management Manual* (RTA, 2001) (ENMM)
- *Roads and Maritime Construction Noise and Vibration Guideline* (Roads and Maritime 2016) (CNVG).

6.5.2 Existing environment

The *NSW Road Noise Policy* (NSW RNP) (DECCW, 2011) provides definitions of the functional class of the road under consideration. Towong Road is classified as a sub-arterial road.

A traffic volume of approximately 100 vehicles per day was assumed for current traffic, which was also utilised for modelling, with approximately 50 per cent on these being heavy vehicles. The year of opening of the proposal for modelling was assumed to be 2023.

All potentially affected residential properties are located to the west of Towong Bridge, and within the state of Victoria. There is no noise sensitive residential use adjacent to the project within NSW. The camping ground adjacent to the existing bridge is not considered a noise sensitive receiver due to the likely absence of campers during work as the camping ground has potential to be used for a site compound during demolition and construction and would not be in use.

6.5.3 Design objectives and noise criteria

NSW

Based on the requirements of the *Roads and Maritime Noise Criteria Guideline* (NCG) (Roads and Maritime, 2015), the desktop ONIA determined whether the project may be classified as minor work (i.e. traffic noise levels would not increase by more than + 2 adjusted decibels (dBA) as a result of the proposal). If noise levels are found to increase by more than 2 dBA in the year the project opens, a further detailed assessment would be required. If the proposal would not increase traffic noise impacts by more than 2dBA in the year of opening, no further acoustic investigations or treatments would be required.

Victoria

The VicRoads *Traffic Noise Reduction Policy* (VTNRP) (VicRoads, 2005) establishes the traffic noise criteria for new road projects within Victoria. Though the project is primarily located within NSW, the noise sensitive receivers are located with Victoria, therefore an assessment against the criteria from the VTNRP was completed for information purposes. The VTNRP specifies the following traffic noise limits:

- a limit of 63 dBA applies to new arterial roads and freeways if the noise level had been less 63 dBA before the road was built. However, if the existing noise level was 63 dBA or more, (e.g. from local roads), a noise increase of up to 2dBA is allowed.
- a limit of 63 dBA applies to arterial roads and freeways where two lanes are added AND buildings which previously provided shielding from traffic noise are removed.

VicRoads would also consider limiting the increase in traffic noise due to a new road to no more than 12 dBA where the pre-existing noise level is less than 50 dBA.

6.5.4 Potential impacts

Construction noise and vibration

Construction noise and vibration from TfNSW road projects are typically addressed in accordance with the *Construction Noise and Vibration Guideline* (RMS 2016) (CNVG). However, it is noted that all residential receivers within the assessment footprint are located within Victoria, therefore consideration may be given to the Victorian guideline *Noise Guidelines – Construction and Maintenance Works* (VicRoads 2007). A general overview of the criteria from both states is provided in Table 6-11.

Table 6-11: Comparison of NSW and Victorian Construction Noise Criteria

Time	NSW		Victoria	
	Time Period	Noise Management Level	Time Period	Noise Limit
Day	Standard Hours: 7:00am to 6:00pm Monday to Friday 8:00am to 1:00pm Saturdays	RBL + 10 dBA	7:00am to 6:00pm Monday to Friday 7:00am to 1:00pm Saturdays	Nil
Evening	6:00pm to 7am Monday to Friday	RBL + 5 dBA	6:00pm to 10:00pm Monday to Friday	Noise level at any residential premises not to exceed

Time	NSW		Victoria	
	Time Period	Noise Management Level	Time Period	Noise Limit
	1:00pm to 12:00am Saturdays Sundays & Public Holidays		1:00pm to 10:00pm Saturdays 7:00am to 10:00pm Sundays & Public Holidays	background noise by: (i) 10 dB(A) or more for up to 18 months after project commencement. (ii) 5 dB(A) or more after 18 months.
Night	As Above	As Above	As Above	Noise should not be above background levels inside any adjacent residence between: (i) 10:00pm to 7:00am Monday to Sunday

It is anticipated that construction would be undertaken during standard hours only. In this case, NSW criteria would be more stringent than the Victorian equivalent. Note that the Victorian guideline does not specify a set noise limit for daytime works.

In accordance with the CNVG, the recommended safe work distances for various construction equipment are presented in Table 6-12.

Table 6-12: Recommended minimum working distances for vibration intensive plant from sensitive receiver

Plant item	Rating / description	Minimum working distance		
		Cosmetic damage (BS 7385)	Cosmetic damage (DIN 4150) Heritage and other sensitive structures	Human response (OH&E Vibration Guideline)
Vibratory roller	< 50 kN (typically 1-2 tonnes)	5 m	14 m	15 m to 20 m
	< 100 kN (typically 2-4 tonnes)	6 m	16 m	20 m
	< 200 kN (typically 4-6 tonnes)	12 m	33 m	40 m
	< 300 kN (typically 7-13 tonnes)	15 m	41 m	100 m
	> 300 kN (typically 13-18 tonnes)	20 m	54 m	100 m
	> 300 kN (> 18 tonnes)	25 m	68 m	100 m

Plant item	Rating / description	Minimum working distance		
		Cosmetic damage (BS 7385)	Cosmetic damage (DIN 4150) Heritage and other sensitive structures	Human response (OH&E Vibration Guideline)
Small hydraulic hammer	(300 kg - 5 to 12t excavator)	2 m	5 m	7 m
Medium hydraulic hammer	(900 kg – 12 to 18t excavator)	7 m	19 m	23 m
Large hydraulic hammer	(1600 kg – 18 to 34t excavator)	22 m	60 m	73 m
Vibratory pile driver	Sheet piles	2 m to 20 m	50 m	20 m
Pile boring	≤ 800 mm	2 m (nominal)	40 m	4 m
Jackhammer	Hand held	1 m (nominal)	2 m	2 m

The nearest residential dwelling is located approximately 60 metres from the proposed bridge. Depending on final equipment selections, there may be potential for construction works to exceed the Human response limits.

Operational noise and vibration

The assessment of current and future traffic conditions has resulted in the following conclusions:

- The predicted traffic noise levels in the year of opening (2023) are not predicted to exceed pre-existing traffic noise levels by more than 2 dBA, primarily as a result of the horizontal distance between the residents and the new road alignment not decreasing significantly
- Replacement of the bridge would create minor alterations to road geometry, including horizontal and vertical alignment and the addition of a lane (from one lane to two lanes). It is assumed the project would not increase traffic volumes or significant changes to vehicle speeds on Towong Road
- Measurements of traffic noise and traffic counts for Towong Road have not been conducted for the assessment. As it is predicted the project would not increase traffic noise levels by more than 2 dBA, the project can be classified as minor work in accordance with the NCG. Therefore, traffic noise monitoring should not be required
- A review of audio from a vehicle traversing Towong Bridge indicates that noise is created by rattling of the wooden bridge structure. This noise source would become non-existent with a concrete bridge structure, provided any expansion joints are adequately treated to ensure noise is not created by the tyre/expansion joint interaction
- Traffic noise impacts are predicted to comply with the VTNRP criteria. This is primarily due to low traffic volumes on Towong Road and Brooke Street.

6.5.5 Safeguards and management measures

Table 6-13 lists the noise and vibration safeguards and management measures that would be implemented to account for the impacts identified in section 6.5.4.

Table 6-13: Noise and vibration safeguards and management measures

ID	Impact	Environmental safeguards	Responsibility	Timing
NV1	Noise and vibration	• Carrying out work within standard daytime hours as follows: – 7am to 6pm Monday to Friday – 8am to 1pm Saturdays, no work on Sundays or public holidays. • Do not carry out operations during evening or night-time hours, unless required for safety reasons when the water is calmer during the night period or due to requirements to enable bus access. • Should operations be required outside standard hours, an Out of Hours procedure detailing work schedule, approval process, communications requirements and management measure will be prepared.	Transport/Contractor	Construction
NV2	Construction noise and vibration	• Due to the proximity of residential receivers to the construction works, a Construction Noise and Vibration Management Plan (CNVMP) should be prepared prior to construction works commencing.	Transport/Contractor	Pre-construction

6.6 Landscape character and visual amenity

This section summarises the proposal's landscape character and visual impacts.

6.6.1 Methodology

A qualitative assessment of landscape character and visual amenity was performed and considers:

- the Statement of Heritage Impact (SoHI) (Austral, 2021) to inform visual heritage values of the landscape
- construction and operation impacts to the landscape and visual amenity.

6.6.2 Existing environment

Towong Bridge has significant aesthetic significance due to its natural, rural setting and positioning over the Murray River. Broad views from the location contain the Upper Murray River, farmland valleys and the main range of the Snowy Mountains.

The bridge provides a gateway between NSW and Victoria and is surrounded primarily by public reserve which is popular as a camping location.

6.6.3 Potential impacts

Impacts on the following landscape character and visual amenity matters have previously been discussed in the relevant sections:

- biodiversity, refer to section 6.1
- non-Aboriginal heritage, refer to section 6.2.

Other expected impacts on landscape character and visual amenity matters include:

- minor and temporary impacts to the landscape during construction as a result of the presence of construction plant and equipment
- removal of heritage timber bridge which is a locally significant heritage item and visual feature of the landscape in the immediate area.

6.6.4 Safeguards and management measures

Table 6-14 lists the landscape character and visual amenity safeguards and management measures that would be implemented to account for the impacts identified in section 6.6.3.

Table 6-14: Landscape character and visual amenity safeguards and management measures

ID	Impact	Environmental safeguards	Responsibility	Timing
LV1	Landscape and visual	Where out of hours work is required, lighting will be directionally controlled to limit potential impacts of light spill on surrounding receivers, including residential properties.	Transport/Contractor	Construction
LV2	Landscape and visual	All impacted areas and ground surfaces will be reinstated as near as possible to their original state following the completion of work.	Transport/Contractor	Post-construction

6.7 Land surface and geology

This section describes the existing land surface and geology and potential impacts associated with the proposal.

6.7.1 Methodology

A qualitative assessment of land surface and geology was performed including evaluation of construction and operation impacts to land surface and geology.

6.7.2 Existing environment

Soil and geology

The Concept Design Report (SMEC, 2020) included a desktop study on subsurface conditions at the existing bridge. The site is generally underlain by Murray River alluvial deposit, overlying granite of the Corryong Batholith.

Seven boreholes drilled during April 2010 for previous remedial work logged varying thicknesses of alluvium deposit comprised of loose to very loose sand or silty sand, overlying medium dense to very dense sandy gravel or gravelly sand. Alluvial layers overly extremely low to low strength granite, followed by highly weathered fresh moderate to high strength granite.

Acid sulfate soils

The Tumbarumba LEP does not contain an acid sulfate soils (ASS) risk map.

A review of the Australian Soil Resource Information System (ASRIS) on the 19 April 2021 indicated there is a low probability/very low confidence of ASS in the area.

Contamination

A contamination assessment was completed by Vantage Environmental Management as part of Towong Bridge Temporary Pier Support Works Review of Environmental Factors (RMS, 2016). The report identified that soil contaminants exceeding the National Environmental Protection Measures (NEPM) levels for commercial and industrial sites were not present at the time of assessment. One paint sample from the bridge contained lead. All painted bridge elements, timber elements and soils could be classified as general solid waste under the NSW EPA.

A search of the NSW EPA online contaminated land record of notices on 19 April 2021 identified only one site in the Tumbarumba LGA, located approximately 90 kilometres to the north-east of the proposal site.

A review of the Victorian EPA Licensed Sites on 19 April 2021 identified the closest EPA licensed site point/area approximately 10 kilometres to the south-west of the proposal site.

There are no premises operating under a licence issued under the POEO Act in the vicinity of the proposal site.

An inspection of the proposal area was undertaken by a Senior Project Manager from Cardno on the 9 February 2021. No obvious signs of contamination (i.e. asbestos, soil staining or vegetation dieback) were observed on the surface during the walkover.

6.7.3 Potential impacts

The proposal may impact on the land surface and geology due to:

- excavation of soil and sediment runoff from vegetation removal on surrounding banks
- disturbance of the river bed during pile driving and pile removal
- potential fuel spills from construction work (e.g. from plant and equipment failure) or during operation (e.g. from vehicles using the bridge).

These impacts are expected to be short-term and able to be managed through identified safeguard and management measures.

6.7.4 Safeguards and management measures

Table 6-15 lists the safeguards and management measures that would be implemented to protect the land surface and hydrology to account for the impacts identified in section 6.7.3.

Table 6-15: Land surface and hydrology safeguards and management measures

ID	Impact	Environmental safeguards	Responsibility	Timing
LS1	Soil and water	A Soil and Water Management Plan (SWMP) will be prepared and implemented as part of the CEMP. The SWMP will identify all reasonably foreseeable risks relating to soil erosion and water pollution and describe how these risks will be addressed during construction.	Transport/Contractor	Pre-construction
LS2	Soil and water	Any excavated sediments or soil that require disposal will be sampled, tested and classified in accordance with the EPA's W*aste Classification Guidelines: Part 1 Classifying Waste* (EPA, 2014) before being disposed of at a waste facility licensed to accept the relevant class of waste. Any materials classified as Hazardous Waste may require treatment or an immobilisation approach in accordance with Part 10 of the *Protection of the Environment Operations (Waste) Regulation 2014* before off-site disposal.	Transport/Contractor	Construction
LS3	Soil and water	Clean and suitable topsoil will be stockpiled and reused on site where appropriate.	Transport/Contractor	Construction
LS4	Contaminated land	If unexpected contaminated areas are encountered during construction, appropriate control measures will be implemented to manage the immediate risks of contamination. All other work that may impact on the contaminated area will cease until the nature and extent of the contamination has been confirmed and any necessary site-specific controls or further actions identified in consultation with the Transport Environment Manager and/or EPA.	Transport/Contractor	Construction
LS5	Contaminated land	The piling methodology shall seek to mitigate the risk of sediment dispersal.	Transport/Contractor	Construction
LS6	Erosion and sedimentation	Site specific Erosion and Sediment Control Plan/s will be prepared and implemented as part of the SWMP. Control measures are to be implemented	Transport/Contractor	Pre-construction

ID	Impact	Environmental safeguards	Responsibility	Timing
		and maintained (in accordance with the Landcom/Department of *Housing Managing Urban Stormwater, Soils and Construction Guidelines*, the Blue Book) to: • Prevent sediment moving off-site and sediment laden water entering any water course, drainage lines, or drain inlets • Reduce water velocity and capture sediment on site • Minimise the amount of material transported from site to surrounding pavement surfaces • Divert clean water around the site.		
LS7	Erosion and sedimentation	Visual monitoring of local water quality (i.e. turbidity, hydrocarbon spills/slicks) is to be carried out on a regular basis to identify any potential spills or deficient silt curtains or erosion and sediment controls. Results of the observations are required to be recorded. Records are required to be kept on the site and to be made available for inspection by persons authorised by Transport.	Transport/Contractor	Construction

6.8 Hydrology, flooding and water quality

This section describes the existing water quality near the site and potential impacts associated with the proposal.

6.8.1 Methodology

A qualitative assessment of water quality and hydrology was performed including:

- desktop assessment of existing hydrology and water quality of the Murray River and Upper Murray Catchment
- evaluation of construction and operation impacts to water quality and hydrology.

6.8.2 Existing environment

Hydrology

The proposal is located in the Upper Murray catchment of NSW. The catchment covers approximately two percent of the Murray-Darling Basin and contributes approximately 17 percent of the basin water (MDBA, 2021) with the Hume Dam being the main storage on the Murray River.

The Upper Murray catchment is located in southern NSW and northern Victoria along the NSW-Victoria border. Elevations across the catchment range from 2,200 metres around the alpine peaks in the east to 150 metres at Hume Dam.

The Upper Murray is a mountainous catchment, with the catchment being up to 80 per cent forested, that supports vast areas of wilderness and important alpine habitats. The headwaters of the Murray River start from three springs in alpine grassland in the Australian Alps that then form a stream, and the alpine wetlands within Kosciuszko National Park are of international significance (MDBA, 2021).

The Snowy Mountains Hydro-electric Scheme is located in the Upper Murray and Murrumbidgee catchments. Surface water and groundwater systems in the Upper Murray catchment range from being highly connected to disconnected.

Flooding

The Concept Design Report (SMEC, 2020) included hydrology/hydraulics assessment for the proposal location.

The majority of upstream catchment flows through the 1.6-kilometre-wide floodplain east of Towong Road, overtopping the road embankment in events more frequent than the 5-year ARI flood. The floodplain overtops the road at approximately 250 metres AHD within the vicinity of the bridge.

A flood model suitable for the concept design was developed by SMEC due to the flood study model of the Upper Murray Catchment not being made available at the time of reporting.

The proposal design was determined to have a smaller effective pier area than the existing bridge, resulting in an increase in unobstructed waterway area. The piers would be aligned with the direction of flow to maximise hydraulic efficiency.

Water quality

The water quality of the Murray River in this area is highly influenced by agricultural activities. Agricultural production in the Upper Murray catchment includes cattle grazing, horticulture, viticulture and dairying (MDBA, 2021).

As of April 2021, the most possible threats to water quality within the Upper Murray catchment were considered high turbidity and bushfire contamination (MDBA, 2021a). Turbidity is considered as primarily caused by sediment flushed into rivers by erosion, following bushfires, or stirred up by carp.

Runoff from surrounding agricultural properties is likely to include sediment and high levels of nutrients, such as nitrogen and phosphorus, from animal waste and fertilisers. An additional pollution source is town waste water. However, overall, water quality is expected to be good in the proposal area with no signs of poor water quality on the day of the field survey (17 February 2021, refer to section 6.1) with no odour or foaming identified, and no evidence of localised impacts such as discharge points.

For work activities undertaken on the Victorian side of the Murray River (above the mean high water mark), the Victorian EPA Publication 1834 (Civil construction, building and demolition guide; November 2020) would be taken into consideration and applied via relevant management systems.

6.8.3 Potential impacts

The proposal design minimises flood impacts associated with floodwater being obstructed by the submerged bridge deck, as the lowest soffit level of the preferred design is above the 100-year average recurrence interval (ARI) flood level. Additionally, the proposal design was determined to have a smaller effective pier area than the existing bridge, resulting in an increase in unobstructed waterway area. The piers would be aligned with the direction of flow to maximise hydraulic efficiency.

The proposal may impact on flooding and water quality due to:

- sediment runoffs- from vegetation removal on surrounding banks
- disturbance of the river bed during pile driving and pile removal
- debris entering the river and potential disturbance of contaminated soil during demolition of the existing bridge
- potential fuel spills from construction work or plant and equipment failure
- potential run-off from stockpile and site compound areas near the river
- potential flood impacts during instream works, including works at a construction compound if located within the flood zone, which may result in potential injury or loss of life and or damage to property.

These impacts are expected to be short-term and able to be managed through identified safeguard and management measures.

6.8.4 Safeguards and management measures

Table 6-16 lists the safeguards and management measures that would be implemented to protect water quality and flooding to account for the impacts identified in section 6.8.3.

Table 6-16: Flooding and water quality safeguards and management measures

ID	Impact	Environmental safeguards	Responsibility	Timing
WQ1	Accidental spill	• A spill management plan will be developed as part of the CEMP and communicated to all staff working on site. • Appropriate land and aquatic spill kits are to be maintained on site and on barges. Aquatic spill kits must be specific for working within the marine environment. The spill kit must be appropriately sized for the volume of potentially polluting liquids stored at the work site. • All workers will be advised of the location of the spill kit and trained in its use.	Transport/Contractor	Pre-construction / Construction
WQ2	Accidental spill	If an incident (e.g. spill) occurs, the Transport *Environmental Incident Classification and Reporting Procedure* is to be followed and the Transport Contract Manager notified as soon as practicable.	Transport/Contractor	Construction
WQ3	Accidental spill	Emergency contacts will be kept in an easily accessible location on vehicles, vessels, plant and site office. All workers will be advised of these contact details and procedures.	Transport/Contractor	Pre-construction / Construction
WQ4	Accidental spill	Vehicles, vessels and plant must be properly maintained and regularly inspected for fluid leaks.	Transport/Contractor	Construction
WQ5	Accidental spill	No vehicle or vessel wash-down or re-fuelling will occur on-site.	Transport/Contractor	Construction
WQ6	Accidental spill	Any chemicals or fuels stored at the site or equipment barges will be stored in a bunded area.	Transport/Contractor	Construction
LS1	Soil and water	A Soil and Water Management Plan (SWMP) will be prepared and implemented as part of the CEMP. The SWMP will identify all reasonably foreseeable risks	Transport/Contractor	Pre-construction

ID	Impact	Environmental safeguards	Responsibility	Timing
		relating to soil erosion and water pollution and describe how these risks will be addressed during construction.		
LS2	Soil and water	Any excavated sediments or soil that require disposal will be sampled, tested and classified in accordance with the EPA's W*aste Classification Guidelines: Part 1 Classifying Waste* (EPA, 2014) before being disposed of at a waste facility licensed to accept the relevant class of waste. Any materials classified as Hazardous Waste may require treatment or an immobilisation approach in accordance with Part 10 of the *Protection of the Environment Operations (Waste) Regulation 2014* before off-site disposal.	Transport/Contractor	Construction
LS3	Soil and water	Clean and suitable topsoil will be stockpiled and reused on site where appropriate.	Transport/Contractor	Construction
LS4	Contaminated land	If unexpected contaminated areas are encountered during construction, appropriate control measures will be implemented to manage the immediate risks of contamination. All other work that may impact on the contaminated area will cease until the nature and extent of the contamination has been confirmed and any necessary site-specific controls or further actions identified in consultation with the Transport Environment Manager and/or EPA.	Transport/Contractor	Construction
LS5	Contaminated land	The piling methodology shall seek to mitigate the risk of sediment dispersal.	Transport/Contractor	Construction
LS6	Erosion and sedimentation	Site specific Erosion and Sediment Control Plan/s will be prepared and implemented as part of the SWMP. Control measures are to be implemented and maintained (in accordance with the Landcom/Department of *Housing Managing Urban Stormwater, Soils and Construction Guidelines*, the Blue Book) to: • Prevent sediment moving off-site and sediment laden water entering any water course, drainage lines, or drain inlets • Reduce water velocity and capture sediment on site • Minimise the amount of material transported from site to surrounding pavement surfaces Divert clean water around the site.	Transport/Contractor	Pre-construction

ID	Impact	Environmental safeguards	Responsibility	Timing
LS7	Erosion and sedimentation	Visual monitoring of local water quality (i.e. turbidity, hydrocarbon spills/slicks) is to be carried out on a regular basis to identify any potential spills or deficient silt curtains or erosion and sediment controls. Results of the observations are required to be recorded. Records are required to be kept on the site and to be made available for inspection by persons authorised by Transport.	Transport/Contractor	Construction
F1	Flooding	Measures identified in the proposal Safety in Design Report (Cardno 2021a) are to be adhered to throughout the proposed works.	Transport/Contractor	Construction

6.9 Socio-economic

This section summarises the proposal's socio-economic impacts.

6.9.1 Methodology

A qualitative assessment of the socio-economic environment was performed including:

- desktop assessment of the socio-economic environment of the local and surrounding community
- evaluation of construction and operation impacts to the socio-economic environment.

6.9.2 Existing environment

The existing Towong Bridge is a key link between NSW and Victoria for the local community and interstate and regional travellers. It is used by local traffic as well as through traffic from regional NSW and Victoria.

The bridge is surrounded primarily by public reserve which is popular as a camping location. Activities associated with the Murray River surrounding the location include fly-fishing, canoeing, bird watching, bushwalking, picnicking and swimming.

Agricultural production in the Upper Murray catchment is indicative of the proposal location and includes cattle grazing, horticulture, viticulture and dairying (MDBA, 2021). Parkland areas and recreational facilities are located along the river foreshore adjacent to the bridge.

Tourism provides economic value to the area due to the historic Towong Racecourse which has been hosting thoroughbred horse racing since 1871. Towong Cup Races is held at the racecourse on the Victorian long weekend in March annually, and brings visitors from Victoria and NSW (Upper Murray, 2019).

The land titles of the land within the proposal area are listed in Table 6-17

Table 6-17: Properties with the proposal area

Detail	Comments
Land Titles	The proposal intersects or passes through the following properties
	Lot 8A-G/PP5799 Lot 11B-J/PP5799 Lot 11C-J/PP5799

6.9.3 Potential impacts

Impacts on the following socio-economic matters have previously been discussed in the relevant sections:

- transport and traffic, refer to section 6.4
- noise and vibration, refer to section 6.5
- landscape character and visual amenity, refer to section 6.6.

Other expected impacts on socio-economic matters include:

- potential minor financial loss to local businesses during closures of the bridge
- temporary loss of potential camping area during construction to accommodate ancillary facilities. Safeguards and management measures.

6.9.4 Safeguards and management measures

Table 6-18 lists the socio-economic safeguards and management measures that would be implemented to account for the impacts identified in section 6.9.3.

Table 6-18: Socio-economic safeguards and management measures

ID	Impact	Environmental safeguards	Responsibility	Timing
SE1	Socio-economic	• Contact details will be clearly displayed at the entrance to the site. • All enquiries and complaints will be tracked through a tracking system, and acknowledged within 24 hours of being received.	Transport/Contractor	Pre-construction / construction
SE2	Socio-economic	Investigate opportunities to encourage the construction contractor to purchase goods and services locally.	Transport/Contractor	Pre-construction / construction

6.10 Air quality

This section summarises the proposal's air quality impacts.

6.10.1 Methodology

A qualitative assessment of the air quality was performed and included:

- desktop assessment of the air quality near the proposal site
- evaluation of construction and operation impacts to the air quality.

6.10.2 Existing environment

The existing air quality near the location of the proposal is primarily influenced by emissions from motor vehicles, agriculture and residential activities. Air quality is also influenced by the prevailing weather and climatic conditions, bushfires and other natural factors such as pollen.

The nearest DPIE air quality monitoring station to the site is the Albury monitoring station, which was commissioned in 2018 and is part of the South-west Slopes monitoring network.

A review of air quality data from April 2020 to April 2021 Albury indicates that air quality is generally categorised as 'Good' based on the air quality category (AQC) (DPIE, 2020).

The closest Bureau of Meteorology (BoM) monitoring station to the location of the proposal with rainfall data is located at Khancoban Automatic Weather Stations (AWS)

weather station (station number 072162) is located about 17.5 kilometres to the south-east of the proposal. Data from the BoM (BoM, 2020) reports the average annual rainfall recorded at Khancoban AWS is 917.8 millimetres. Afternoon winds are generally stronger than morning winds tending towards 7-14 kilometres per hour with morning winds generally 3-6 kilometres per hour (BoM, 2020). Wind direction and speed varies throughout the day, usually being calmer in the morning. Wind speed and direction also varies throughout the year.

6.10.3 Potential impacts

Construction

During the construction of the proposal temporary impacts on air quality may arise from:

- minor generation of particles and dust from general construction work (e.g. excavations, concrete cutting and breaking)
- minor emissions (primarily diesel exhaust) from plant and machinery
- minor emissions from construction traffic and water vessels.

These impacts are expected to be short-term, low intensity and able to be managed through identified safeguard and management measures.

Operation

The level of operation of the road network or bridge would not increase so no additional impacts to the air quality expected from the operation of the proposal.

6.10.4 Safeguards and management measures

Table 6-19 lists the air quality safeguards and management measures that would be implemented to account for the impacts identified in section 6.10.3.

Table 6-19: Air quality safeguards and management measures

ID	Impact	Environmental safeguards	Responsibility	Timing
AQ1	Air quality	Air quality during construction will be considered and addressed within the CEMP and would include methods to manage work during strong winds or other adverse weather conditions as required. As a minimum, the following measures will be included: • Covering all loaded trucks and vessels • Machinery to be turned off rather than left to idle when not in use • Maintenance of all vehicles, including trucks and vessels entering and leaving the site in accordance with the manufacturers	Transport/Contractor	Pre-construction / construction

ID	Impact	Environmental safeguards	Responsibility	Timing
		specifications to comply with all relevant legislation • Maintenance of all plant and equipment to ensure good operating conditions and exhaust emissions comply with the Protection of the Environment Operations Act 1997 • Maintaining the work site in a condition that minimises fugitive emissions such as minor dust • Appropriate sediment and erosion controls for any exposed earth or stockpiled waste.		
AQ2	Sustainability	During construction, the construction contractor is to monitor performance of their non-road diesel plant and equipment against US EPA, EU or equivalent emissions standards using Transport *Air Emissions Workbook - DMS-FT-439*.	Transport/Contractor	Construction

6.11 Waste management

6.11.1 Methodology

The assessment considered the impacts associated with:

- resource use and materials management during demolition of existing bridge and construction
- waste generation, management and disposal during demolition of existing bridge and construction
- the proposal's ability to respond to waste management and resource conservation plans, policies and guidelines.

The basis of assessment was to consider the hierarchy of avoiding waste generation and primary resource use in favour of reduction, reuse and recycling, consistent with the *Waste Avoidance and Resource Recovery Act 2001* (WARR Act).

6.11.2 Potential impacts

Construction

Construction activities would generate various waste streams that would need to be managed and disposed of. Potential wastes include:

- waste from demolition of existing bridge including timber, metal
- waste fuels, oils, liquids and chemicals
- packaging wastes such as cardboard, timber, paper and plastic
- general garbage and sewage from the temporary compound
- potential for acid sulfate soils in the marine environment
- potential for contaminated soils and sediment
- various building material wastes (including metals, timbers, plastics and concrete)
- earthworks spoil
- asphalt and concrete
- general waste, including food, litter and other wastes generated by the construction workers.

Ancillary facilities would be contained within the site compound(s), and include a portable toilet and small shipping container/shed. Minimal storage of materials is anticipated, but may include precast materials and some plant and equipment. All waste removed from the proposal footprint would be transferred by a licenced contractor to a licenced receiving facility.

Any excavated material would be reused where suitable or classified before being disposed to an appropriately licenced facility in accordance with *Waste Classification Guidelines: Part 1 Classifying Waste* (EPA, 2014). Where necessary, this would include sampling and analysis.

Operation

Operation of the proposal is not anticipated to have any impact to waste generation at the site.

6.11.3 Safeguards and management measures

Table 6-20 lists the waste management safeguards and management measures that would be implemented to account for the impacts identified in section 6.11.2.

Table 6-20: Waste management safeguards and management measures

ID	Impact	Environmental safeguards	Responsibility	Timing
WM1	Waste	A Waste Management Plan (WMP) will be prepared in accordance with the WARR Act. A WMP is to be prepared as part of the CEMP and would include measures to minimise waste, outline methods of disposal, reuse and recycling and monitoring, as appropriate. This is to include the following: • Appropriate measures to avoid and minimise waste associated with the proposal should be investigated and	Transport/Contractor	Pre-construction / Construction

ID	Impact	Environmental safeguards	Responsibility	Timing
		implemented where possible • Waste management, littering and general tidiness will be monitored during routine site inspections.		
WM2	Resource use	Recycled, durable, and low embodied energy products will be considered to reduce primary resource demand in instances where the materials are cost and performance competitive and comparable in environmental performance (e.g. where quality control specifications allow).	Transport	Detailed design
LS1	Waste	Any excavated sediments or soil that require disposal will be sampled, tested and classified in accordance with the EPA's W*aste Classification Guidelines: Part 1 Classifying Waste* (EPA, 2014) before being disposed of at a waste facility licensed to accept the relevant class of waste. Any materials classified as Hazardous Waste may require treatment or an immobilisation approach in accordance with Part 10 of the *Protection of the Environment Operations (Waste) Regulation 2014* before off-site disposal.	Transport/Contractor	Construction

6.12 Cumulative impacts

6.12.1 Study area

Towong Bridge is within the Tumbarumba and Towong Shire local government areas (LGAs). Projects within these LGAs have been considered for the purposes of this cumulative impact assessment.

A search of the following databases was completed to identify any projects which might result in cumulative impact with the proposal:

- DPIE – major projects
- Victorian Department of Transport permit referrals.

No projects were identified in the vicinity of the proposal site.

6.12.2 Potential impacts

The potential cumulative impacts are listed in Table 6-21.

Table 6-21: Potential cumulative impacts

Environmental factor	Construction	Operation
Socioeconomic	Closure of Murray River crossing in this location with detour required and likely closure of camping ground to immediate south of Towong Road for temporary site compound.	No operational impacts are anticipated.
Traffic and transport	Closure of Murray River crossing in this location with detour required.	No operational impacts are anticipated.

6.12.3 Safeguards and management measures

Table 6-22 lists the cumulative impacts safeguards and management measures that would be implemented to account for the impacts identified in section 6.12.2.

Table 6-22: Cumulative impacts safeguards and management measures

No.	Impact	Environmental safeguards	Responsibility	Timing
C1	Cumulative construction impacts	• Consultation would include notification of relevant stakeholders before the start of the work • Updates on any delays or changes to the construction period would also be communicated.	Transport	Pre-construction / construction

7 Environmental management

This chapter describes how the proposal would be managed to reduce potential environmental impacts throughout detailed design, construction and operation. A framework for managing the potential impacts is provided. A summary of site-specific environmental safeguards is provided and the licence and/or approval requirements required before construction are also listed.

7.1 Environmental management plans (or system)

A number of safeguards and management measures have been identified in the REF in order to minimise adverse environmental impacts, including social impacts, which could potentially arise as a result of the proposal. Should the proposal proceed, these safeguards and management measures would be incorporated into the detailed design and applied during the construction and operation of the proposal.

A Construction Environmental Management Plan (CEMP) would be prepared to describe the safeguards and management measures identified. The CEMP would provide a framework for establishing how these measures would be implemented and who would be responsible for their implementation.

The CEMP would be prepared before construction of the proposal and must be reviewed and certified by the Transport Environment Officer before the start of any on-site work. The CEMP would be a working document, subject to ongoing change and updated as necessary to respond to specific requirements.

7.2 Summary of safeguards and management measures

Environmental safeguards and management measures outlined in this REF would be incorporated into the detailed design phase of the proposal and during construction and operation of the proposal, should it proceed. These safeguards and management measures would minimise any potential adverse impacts arising from the proposed work on the surrounding environment. The safeguards and management measures are summarised in Table 7-1.

Table 7-1: Summary of safeguards and management measures

No.	Impact	Environmental safeguards	Responsibility	Timing
B1	Removal of native vegetation, habitat and habitat features	Sediment fencing installed below all areas of exposed soil during work. This would lead to the prevention of migration of unconsolidated soil into terrestrial and aquatic environments	Transport/Contractor	Before construction
B2	Removal of native vegetation, habitat and habitat features	As the exact impact area and location of ancillary facilities have not yet been determined the construction boundary has been used to determine a maximum extent of vegetation pruning/clearing as a result of the Project. Approximately 0.29 ha of native/exotic woody vegetation (inclusive of 0.04 ha native vegetation community - PCT 5) and approximately 1.07 ha of exotic grassland fall within the construction boundary as illustrated in Figure 6-4. This boundary provides the maximum potential impacts to vegetation within the Study Area. It is recommended that the construction area layout be designed to avoid harm to or require the removal of any native trees. If required, trees/native vegetation must be pruned rather than removed where possible. Vegetation to be removed must be identified and limited to the work areas (i.e. no vegetation removal is permitted for establishment of the construction compound). No other native remnant vegetation is to be removed as a result of the project.	Transport/Contractor	Before construction
B3	Removal of native vegetation, habitat and habitat features	Demolition of the bridge should be deconstructed methodically to ensure fauna entrapment/injury does not occur. Pre-clearing surveys will be carried out in accordance with Guide 1: Pre-clearing process of the *Biodiversity Guidelines: Protecting and managing*	Transport	Construction

No.	Impact	Environmental safeguards	Responsibility	Timing
		biodiversity on RTA projects (RTA, 2011). Pre-commencement searches for burrows (including burrows of Platypus) should be carried out immediately before any work. Visual observation for potential microbat species utilising the sub-optimal habitat of the existing bridge structure would be carried out at dusk and prior to works commence in order to help confirm presence of microbat species. If fauna is observed, contact a suitably trained and qualified wildlife handler to carry out rescue and relocation. Injured or juvenile fauna are to be taken to a local veterinarian for assessment and treatment.		
B4	Aquatic impacts	Appropriate runoff controls such as sediment fencing can be installed before any soil disturbance work. Any exogenous soil and water used on site is to be appropriately treated to minimize the introduction of new pests and diseases.	Transport/Contractor	Before construction
B5	Aquatic impacts	Dust minimisation through water suppression, avoiding work on high wind days and limiting dust generating activities to the extent possible.	Transport/Contractor	Construction
B6	Noise and vibration, and light	Restricting work to daylight hours. Minimising the use of loud machinery whenever possible or containing such machinery within noise barriers. This will ensure minimal disturbance to sensitive fauna using habitat within the study area and adjacent lands.	Transport/Contractor	Construction
B7	Removal of marine vegetation and habitat	Any wood debris (greater than 30 cm in diameter or 3 m in length) required to be removed to enable demolition and construction should be placed back into the river upstream or downstream of the river. Otherwise, wood debris should be stockpiled and replaced in the river following completion of work.	Transport/Contractor	Construction/post -construction
B8	Invasion and spread of weeds, pests and diseases	Weed species will be managed in accordance with Guide 6: Weed management of the *Biodiversity Guidelines: Protecting and managing biodiversity on RTA projects* (RTA, 2011).	Transport/Contractor	Construction
B9	Aquatic impacts	Disturbance and mobilisation of sediments from the river channel could be minimised by placing a temporary work platform (e.g. concrete blocks) on the river bed. The use of silt curtains would likely not be practicable or effective in a flowing watercourse.	Transport/ Contractor	Construction

No.	Impact	Environmental safeguards	Responsibility	Timing
H1	Archaeological significance	Before the start of any construction or demolition work, the results of the site inspection (as described in Appendix E) should be outlined in the form of an archival recording prepared in accordance with Heritage Branch guidelines '*How to Prepare Archival Records for Heritage Items and Photographic Recording of Heritage Items Using Film or Digital Capture'* (Heritage Office 1998), which is included in Appendix E.	Transport/Contractor	Construction
H2	Archaeological significance	If unexpected 'relics' are encountered during excavation, a Section 146 relics notification will be forwarded to Heritage NSW, DPC. 'Relics' cannot be impacted without appropriate approvals under the *Heritage Act 1977*.	Transport/Contractor	Construction
H3	Unexpected finds	The Roads and Maritime *Unexpected Heritage Item Procedure 2015* will be implemented if unanticipated heritage items or depositions are located during construction.	Transport/Contractor	Construction
AH1	Aboriginal heritage	In the event that construction plans are altered, specifically in regards to the event that requires excavation work in relation to the establishment of a site compound, a Cultural Heritage Management Plan (CHMP) is required to be prepared in accordance with the Victorian *Aboriginal Heritage Act 2006*.	Transport/Contractor	Pre-construction / Construction
AH2	Unexpected heritage finds	The *Unexpected Heritage Items* (RMS, 2015) procedure will be followed in the event that (an) unknown or potential Aboriginal object(s), including skeletal remains, is/are found during construction. This applies where Transport does not have approval to disturb the object(s) or where a specific safeguard for managing the disturbance (apart from the procedure) is not in place. Work will only restart once the requirements of that procedure have been satisfied.	Transport/Contractor	Construction
T1	Land transport and parking	A Traffic Management Plan (TMP) will be prepared and will include the following. Detour information during demolition of existing bridge and construction of replacement bridge.	Transport/Contractor	Pre-construction

No.	Impact	Environmental safeguards	Responsibility	Timing
T2	Land transport and parking	A road occupancy licence (ROL) must be obtained prior to road or lane closures and a Section 138 permit must be obtained prior to works commencing.	Transport/Contractor	Pre-construction
T3	Water transport	TfNSW must adhere to the requirements of per Part 6, Division 2 of the *Roads Act 1993* prior to the commencement of construction of a bridge or tunnel across navigable waters.	Transport/Contractor	Pre-construction
NV1	Noise and vibration	• Carrying out work within standard daytime hours as follows: – 7am to 6pm Monday to Friday – 8am to 1pm Saturdays, no work on Sundays or public holidays. • Do not carry out operations during evening or night-time hours, unless required for safety reasons when the water is calmer during the night period or due to requirements to enable bus access. Should operations be required outside standard hours, an Out of Hours procedure detailing work schedule, approval process, communications requirements and management measure will be prepared.	Transport/Contractor	Construction
NV2	Construction noise and vibration	Due to the proximity of residential receivers to the construction works, a Construction Noise and Vibration Management Plan (CNVMP) should be prepared prior to construction works commencing.	Transport/Contractor	Pre-construction
LV1	Landscape and visual	Where out of hours work is required, lighting will be directionally controlled to limit potential impacts of light spill on surrounding receivers, including residential properties.	Transport/Contractor	Construction
LV2	Landscape and visual	All impacted areas and ground surfaces will be reinstated as near as possible to their original state following the completion of work.	Transport/Contractor	Post-construction
LS1	Soil and water	A Soil and Water Management Plan (SWMP) will be prepared and implemented as part of the CEMP. The SWMP will identify all reasonably foreseeable risks relating to soil erosion and water pollution and describe how these risks will be addressed during construction.	Transport/Contractor	Pre-construction

No.	Impact	Environmental safeguards	Responsibility	Timing
LS2	Soil and water	Any excavated sediments or soil that require disposal will be sampled, tested and classified in accordance with the EPA's W*aste Classification Guidelines: Part 1 Classifying Waste* (EPA, 2014) before being disposed of at a waste facility licensed to accept the relevant class of waste. Any materials classified as Hazardous Waste may require treatment or an immobilisation approach in accordance with Part 10 of the *Protection of the Environment Operations (Waste) Regulation 2014* before off-site disposal.	Transport/Contractor	Construction
LS3	Soil and water	Clean and suitable topsoil will be stockpiled and reused on site where appropriate.	Transport/Contractor	Construction
LS4	Contaminated land	If unexpected contaminated areas are encountered during construction, appropriate control measures will be implemented to manage the immediate risks of contamination. All other work that may impact on the contaminated area will cease until the nature and extent of the contamination has been confirmed and any necessary site-specific controls or further actions identified in consultation with the Transport Environment Manager and/or EPA.	Transport/Contractor	Construction
LS5	Contaminated land	The piling methodology shall seek to mitigate the risk of sediment dispersal.	Transport/Contractor	Construction
LS6	Erosion and sedimentation	Site specific Erosion and Sediment Control Plan/s will be prepared and implemented as part of the SWMP. Control measures are to be implemented and maintained (in accordance with the Landcom/Department of *Housing Managing Urban Stormwater, Soils and Construction Guidelines*, the Blue Book) to: • Prevent sediment moving off-site and sediment laden water entering any water course, drainage lines, or drain inlets • Reduce water velocity and capture sediment on site • Minimise the amount of material transported from site to surrounding pavement surfaces Divert clean water around the site.	Transport/Contractor	Pre-construction

No.	Impact	Environmental safeguards	Responsibility	Timing
LS7	Erosion and sedimentation	Visual monitoring of local water quality (i.e. turbidity, hydrocarbon spills/slicks) is to be carried out on a regular basis to identify any potential spills or deficient silt curtains or erosion and sediment controls. Results of the observations are required to be recorded. Records are required to be kept on the site and to be made available for inspection by persons authorised by Transport.	Transport/Contractor	Construction
WQ1	Accidental spill	• A spill management plan will be developed as part of the CEMP and communicated to all staff working on site. • Appropriate land and aquatic spill kits are to be maintained on site and on barges. Aquatic spill kits must be specific for working within the marine environment. The spill kit must be appropriately sized for the volume of potentially polluting liquids stored at the work site. All workers will be advised of the location of the spill kit and trained in its use.	Transport/Contractor	Pre-construction / Construction
WQ2	Accidental spill	If an incident (e.g. spill) occurs, the Transport *Environmental Incident Classification and Reporting Procedure* is to be followed and the Transport Contract Manager notified as soon as practicable.	Transport/Contractor	Construction
WQ3	Accidental spill	Emergency contacts will be kept in an easily accessible location on vehicles, vessels, plant and site office. All workers will be advised of these contact details and procedures.	Transport/Contractor	Pre-construction / Construction
WQ4	Accidental spill	Vehicles, vessels and plant must be properly maintained and regularly inspected for fluid leaks.	Transport/Contractor	Construction
WQ5	Accidental spill	No vehicle or vessel wash-down or re-fuelling will occur on-site.	Transport/Contractor	Construction
WQ6	Accidental spill	Any chemicals or fuels stored at the site or equipment barges will be stored in a bunded area.	Transport/Contractor	Construction
F1	Flooding	Measures identified in the proposal Safety in Design Report (Cardno 2021a) are to be adhered to throughout the proposed works.	Transport/Contractor	Construction

No.	Impact	Environmental safeguards	Responsibility	Timing
SE1	Socio-economic	Contact details will be clearly displayed at the entrance to the site. All enquiries and complaints will be tracked through a tracking system, and acknowledged within 24 hours of being received.	Transport/Contractor	Pre-construction / construction
SE2	Socio-economic	Investigate opportunities to encourage the construction contractor to purchase goods and services locally.	Transport/Contractor	Pre-construction / construction
AQ1	Air quality	Air quality during construction will be considered and addressed within the CEMP and would include methods to manage work during strong winds or other adverse weather conditions as required. As a minimum, the following measures will be included: • Covering all loaded trucks and vessels • Machinery to be turned off rather than left to idle when not in use • Maintenance of all vehicles, including trucks and vessels entering and leaving the site in accordance with the manufacturers specifications to comply with all relevant legislation • Maintenance of all plant and equipment to ensure good operating conditions and exhaust emissions comply with the Protection of the Environment Operations Act 1997 • Maintaining the work site in a condition that minimises fugitive emissions such as minor dust Appropriate sediment and erosion controls for any exposed earth or stockpiled waste.	Transport/Contractor	Pre-construction / construction
AQ2	Sustainability	During construction, the construction contractor is to monitor performance of their non-road diesel plant and equipment against US EPA, EU or equivalent emissions standards using Transport *Air Emissions Workbook - DMS-FT-439*.	Transport/Contractor	Construction
WM1	Waste	A Waste Management Plan (WMP) will be prepared in accordance with the WARR Act. A WMP is to be prepared as part of the CEMP and would include	Transport/Contractor	Pre-construction / Construction

No.	Impact	Environmental safeguards	Responsibility	Timing
		measures to minimise waste, outline methods of disposal, reuse and recycling and monitoring, as appropriate. This is to include the following: • Appropriate measures to avoid and minimise waste associated with the proposal should be investigated and implemented where possible Waste management, littering and general tidiness will be monitored during routine site inspections.		
WM2	Resource use	Recycled, durable, and low embodied energy products will be considered to reduce primary resource demand in instances where the materials are cost and performance competitive and comparable in environmental performance (e.g. where quality control specifications allow).	Transport	Detailed design
C1	Cumulative construction impacts	• Consultation would include notification of relevant stakeholders before the start of the work Updates on any delays or changes to the construction period would also be communicated.	Transport	Pre-construction / construction

7.3 Licensing and approvals

A summary of the licences and approvals required for the proposal is provided in Table 7-2.

Table 7-2: Summary of licensing and approvals required

Instrument	Requirement	Authority	Timing
Fisheries Management Act 1994 (NSW)	Any disturbance to the streambed (top of bank to top of bank) requires consultation with Department of Primary Industries (DPI) – Fisheries before start of work.	Department of Primary Industries (DPI) – Fisheries	Before start of the activity.
Crown Lands Management Act 2016 (NSW)	A licence application must be submitted to the DPIE – Crown Lands before any work are carried out in the Murray River.	DPIE – Crown Lands	Before start of the activity
Roads Act 1993 (NSW)	Consultation with Snowy Valleys Council is required before the start of work on Towong Road. A road occupancy licence (ROL) would be obtained before road or lane closures. A Section 138 permit would be obtained before works commenced. Transport for NSW must adhere to the consultation requirements of per Part 6, Division 2 prior to the commencement of construction of a bridge or tunnel across navigable waters.	Snowy Valleys Council	Before start of the activity.
Road Management Act 2004 (Vic)	Clause 16 of Schedule 7 of the Act requires an application to the coordinating road authority for written consent to conduct proposed work on a road.	Towong Shire Council	Before start of the activity.
Road Safety (Traffic Management) Regulations 2009 (Vic)	A memorandum of authorisation (MOA) would be obtained prior to before road or lane closures.	DOT Victoria	Before start of the activity.
Planning and Environment Act 1987 (Vic) *Towong Planning Scheme*	Consultation with Towong Shire Council is required before the start of work. In the event that Towong Shire Council deem the proposal to not be exempt, a planning permit must be obtained by Transport for NSW prior to construction commencing	Towong Shire Council	Before start of the activity.

8 Justification and conclusion

This chapter provides the justification for the proposal taking into account its biophysical, social and economic impacts, the suitability of the site and whether or not the proposal is in the public interest. The proposal is also considered in the context of the objectives of the EP&A Act, including the principles of ecologically sustainable development as defined in Schedule 2 of the Environmental Planning and Assessment Regulation 2000.

8.1 Justification

8.1.1 Social factors

The proposal would result in temporary social impacts whilst being built such as traffic and transport and visual impacts. However, all construction related impacts would be appropriately managed before and during construction.

Operation of the proposal provides justification over and above the temporary impacts, by providing a modern structure with minimal maintenance for the next 25 years and improving road safety and overall user experience at this crossing. This extends to the cultural and amenity benefit of continuing to have a crossing in this location.

8.1.2 Biophysical factors

As discussed in section 6, no significant aquatic or terrestrial ecology impacts have been identified. Adverse impacts are expected as a result of minor vegetation removal and soil disturbance associated with the demolition of the existing bridge and construction of the replacement bridge. Identified impacts would be managed through the safeguards and management measures outlined in this REF.

8.1.3 Economic factors

The bridge replacement would allow for the continued safe and effective use of this crossing location between Victoria and NSW, with the design also providing a modern structure with minimal maintenance for the next 25 years and capable of withstanding the current and future traffic loads.

8.2 Objects of the EP&A Act

The objects of the EP&A Act are considered in Table 8-1.

Table 8-1: Objects of the EP&A Act

Object	Comment
1.3(a) To promote the social and economic welfare of the community and a better environment by the proper management, development and conservation of the State's natural and other resources.	Through the assessment in **Section 6**, it has been identified the proposal would not significantly impact on any natural or artificial resources. The proposal entails the replacement of the existing bridge with a new bridge on the same alignment to provide a safe new river crossing, offering an equivalent or better standard of service than existing.

Object	Comment
1.3(b) To facilitate ecologically sustainable development by integrating relevant economic, environmental and social considerations in decision-making about environmental planning and assessment.	Towong Bridge was ranked as number six in the list of short-term priorities for investment within the Murray River Crossings Investment Priority Assessment (IPA) (RMS and VicRoads, 2018). The IPA identified that the Towong Bridge does not provide a minimum standard of structure condition due to its poor condition as a result of age and therefore needs to be replaced for the safety of road users and to maintain a key connection between local towns and states.
1.3(c) To promote the orderly and economic use and development of land.	Not relevant to the proposal.
1.3(d) To promote the delivery and maintenance of affordable housing.	Not relevant to the proposal.
1.3(e) To protect the environment, including the conservation of threatened and other species of native animals and plants, ecological communities and their habitats.	Terrestrial and aquatic impacts have been assessed as part of the proposal, which is summarised in **Section 6.1**. The assessment concluded that no significant impacts to biodiversity would be caused by the proposal. Vegetation removal is expected to result from the proposal and be minor in nature, with appropriate replanting of banks recommended.
1.3(f) To promote the sustainable management of built and cultural heritage (including Aboriginal cultural heritage).	The identified mitigation measures would mitigate any potential impacts of the proposal on Aboriginal and non-Aboriginal heritage items.
1.3(g) To promote good design and amenity of the built environment.	The proposal has been designed to be consistent with the design objectives identified in **Section 3.2**.
1.3(h) To promote the proper construction and maintenance of buildings, including the protection of the health and safety of their occupants.	The proposal would benefit the local community and interstate travellers through improving amenity, safety and overall user experience. The proposal aligns with this objective as it involves the maintenance of, and continued safe access to, a crossing of the Murray River at this point.
1.3(i) To promote the sharing of the responsibility for environmental planning and assessment between the different levels of government in the State.	Not relevant to the proposal.
1.3(j) To provide increased opportunity for community participation in environmental planning and assessment.	A consultation strategy is currently being prepared for the proposal by Transport for NSW.

8.2.1 Ecologically sustainable development

Ecologically sustainable development (ESD) is development that improves the total quality of life, both now and in the future, in a way that maintains the ecological processes on which life depends. The principles of ESD have been an integral consideration throughout the development of the proposal.

ESD requires the effective integration of economic and environmental considerations in decision-making processes. The four main principles supporting the achievement of ESD are discussed below.

The precautionary principle

The precautionary principle deals with reconciling scientific uncertainty about environmental impacts with certainty in decision-making. It provides that where there is a threat of serious or irreversible environmental damage, the absence of full scientific certainty should not be used as a reason to postpone measures to prevent environmental degradation.

Through the assessment of the potential impacts of the proposal in Section 6, it has been demonstrated that threats of serious or irreversible environmental damage do not exist for the proposal.

Notwithstanding, to account for the subjectivity of professional judgement applied in environmental assessment and modelling uncertainty, worst-case assumptions have been incorporated into the assessment, including:

- conservative ‘worst case’ scenarios were considered while assessing environmental impact
- specialist studies were incorporated to gain a detailed understanding of the existing environment including terrestrial and aquatic ecology, landscape character and visual assessment, noise and vibration, and heritage.

Intergenerational equity

Social equity is concerned with the distribution of economic, social and environmental costs and benefits. Inter-generational equity introduces a temporal element with a focus on minimising the distribution of costs to future generations.

The proposal would result in benefits to the community and future generations through improvements to road user safety and amenity, offering an equivalent or better standard of service than existing.

Conservation of biological diversity and ecological integrity

Conservation of biological diversity and ecological integrity has been considered through the assessment of ecology provided in **Section 6.11** and Appendix D.

Providing the safeguard measures are implemented, the proposal would not have a material or significant impact on biological diversity and ecological integrity within the proposal footprint or surrounds.

Improved valuation, pricing and incentive mechanisms

The principle of internalising environmental costs into decision making requires consideration of all environmental resources which may be affected by the carrying out of a project, including air, water, land and living things.

Environmental, economic and social issues were considered in the rationale for the proposal and design options. Construction planning for the proposal would also be progressed in the most cost-effective way.

Safeguards and management measures detailed in Section 7, including avoiding, reusing, recycling, managing waste during construction and operation, would be implemented.

8.3 Conclusion

8.3.1 Significance of impact under NSW legislation

The proposal would be unlikely to cause a significant impact on the environment. Therefore, it is not necessary for an environmental impact statement to be prepared and approval to be sought from the Minister for Planning and Public Spaces under Division 5.2 of the EP&A Act. A Biodiversity Development Assessment Report or Species Impact Statement is not likely required. The proposal is subject to assessment under Division 5.1 of the EP&A Act. Consent from Snowy Valleys Council is not required.

8.3.2 Significance of impact under Victorian legislation

The proposed works within this jurisdiction are minor and contained within the highly disturbed road corridor and flood scoured embankment. These works would be unlikely to cause a significant impact on the environment. Assessment of the project's scope and potential impacts under the *Environment Effects Act 1978* is not required due to the low environmental impacts anticipated. All other relevant Victorian legislation and associated licences would be confirmed (for their requirement) upon more detailed stakeholder consultation, principally with Towong Shire Council. All requisite approvals would be obtained prior to any works commencing.

8.3.3 Significance of impact under Australian legislation

The proposal is not likely to have a significant impact on matters of national environmental significance or the environment of Commonwealth land within the meaning of the *Environment Protection and Biodiversity Conservation Act 1999*. A referral to the Australian Department of Agriculture, Water and the Environment (DAWE) is not required.

9 Certification

This review of environmental factors provides a true and fair review of the proposal in relation to its potential effects on the environment. It addresses to the fullest extent possible all matters affecting or likely to affect the environment as a result of the proposal.

Cassy Baxter

Team Lead/ Principal - Environment

Cardno (NSW/ACT) Pty Ltd

20 August 2021

I have examined this review of environmental factors and accept it on behalf of Transport for NSW.

10 References

Austral (2021) *Statement of Heritage Impact Towong Bridge Replacement Project*. Austral Archaeology, April 2021.

Austral (2021a) *Aboriginal Desktop Risk Assessment Towong Bridge Replacement Project*. Austral Archaeology, April 2021.

BoM (2020) *Climate data online.* Albury. Bureau of Meteorology. Available online: http://www.bom.gov.au/climate/data/ Accessed 16 April 2021.

Cardno (2019). *Snowy 2.0 EIS. Aquatic Ecology Assessment*. Prepared by Cardno (NSW/ACT) Pty Ltd for EMM Consulting. September 2019.

Cardno (2021). *Demolition Designer's Safety Report Bridge Demolition Service Towong Bridge Replacement*. Prepared by Cardno (NSW/ACT) Pty Ltd. March 2021.

Cardno (2021a) *Safety in Design Report. Replacement Bridge over Murray River at Towong.* Prepared by Cardno (NSW/ACT) Pty Ltd. June 2021.

DECCW (2011) *NSW Road Noise Policy.* Department of Environment, Climate Change and Water, March 2011.

DPI (2013) *Policy and Guidelines for Fish Conservation and Management*, Wollongbar, NSW. Department of Primary Industries.

DPI (2016a) *Fish Communities and Threatened Species Distribution of NSW.* Department of Primary Industries.

DPI (2016b). *Freshwater threatened species distribution maps*. Department of Primary Industries.

DPI (2021). *Priorities Action Statement - Actions for Southern Pygmy Perch.* Department of Primary Industries. Available at: https://www.dpi.nsw.gov.au/fishing/threatened-species/what-current/endangered-species2/southern-pygmy-perch/priorities-action-statement-actions-for-southern-pygmy-perch

DPI (2021a). *Priorities Action Statement - Actions for Flathead Galaxias*. Department of Primary Industries. Available at: https://www.dpi.nsw.gov.au/fishing/threatened-species/what-current/critically-endangered-species/flathead-Galaxias/priorities-action-statement-actions-for-flathead-Galaxias

DPIE (2020) *Search for and download air quality data*. Department of Planning, Industry and Environment. Available online: https://www.dpie.nsw.gov.au/air-quality/search-for-and-download-air-quality-data./ Accessed 16 April 2021.

DUAP (1995/1996) *Is an EIS Required? Best Practice Guidelines for Part 5 of the Environmental Planning and Assessment Act 1979* (Is an EIS required? guidelines). Department of Urban Affairs and Planning.

EPA (2014) *Waste Classification Guidelines Part 1: Classifying waste*, Environment Protection Authority, Sydney.

MDBA (2021) *Upper Murray Snapshot*. Australian Government. Available at: https://www.mdba.gov.au/water-management/catchments/upper-murray

MDBA (2021a) *Water quality.* Available at: https://www.mdba.gov.au/water-management/mdbas-river-operations/water-quality

OEH (2016). *State Vegetation Type Map: Riverina Region Version v1.2 - VIS_ID.* Available at: https://datasets.seed.nsw.gov.au/dataset/riverina-regional-native-vegetation-map-version-v1-0-vis_id-4449

RTA (2011) *Biodiversity Guidelines: Protecting and managing biodiversity on RTA projects.* Roads and Traffic Authority, September 2011.

RMS (2015) *Unexpected Heritage Items. Heritage Procedure 02.* Roads and Maritime Services, November 2015.

RMS (2016) *Towong Bridge Temporary Pier Support Works Review of Environmental Factors*. Roads and Maritime, June 2016.

RMS (2016a) *Guidelines for Biodiversity Offsets*. Roads and Maritime Services, November 2016.

RMS (2016b) *Environmental Impact Assessment Practice Note: Biodiversity Assessment (EIA-N06*) Roads and Maritime Services.

RMS and VicRoads (2018) *Murray River Crossings Investment Priority Assessment*. Roads and Maritime and VicRoads, January 2018.

SMEC (2020) *Replacement of Towong Bridge over the Murray River (B5947) Detailed design*. SMEC, June 2020.

Transport for NSW (2018) *Future Transport Strategy 2056*. Transport for NSW, NSW Government.

Transport for NSW (2021) *50% Detailed Design Constructability Workshop Report*. Ranbury on behalf of Transport for NSW, NSW Government, April 2021.

Upper Murray (2019) *Towong.* Available at: https://www.visituppermurray.com.au/places/towong/

Terms and acronyms used in this REF

Term/ Acronym	Description
ABS	Australian Bureau of Statistics
AHD	Australian Height Datum
AHIMS	Aboriginal Heritage Information Management System
AHIP	Aboriginal heritage impact permit
AQC	Air Quality Category
ASRIS	Australian Atlas of Acid Sulfate Soils
ASS	acid sulphate soils
BC Act	*Biodiversity Conservation Act 2016*
BCA	Building Code of Australia
BoM	Bureau of Meteorology
Cardno	Cardno (NSW/ACT) Pty Ltd
CBD	Central Business District
CCTV	closed circuit television
CD	Chart datum
CEMP	Construction Environmental Management Plan
CHL	Commonwealth Heritage List
CNVG	Roads and Maritime Construction Noise and Vibration Guideline
COPC	contaminants of potential concern
COVID-19	COVID-19 is the infectious disease caused by the most recently discovered coronavirus. COVID-19 is now a pandemic affecting many countries globally. COVID-19 was first confirmed in Australia in late January 2020.
DAWE	Australian Government Department of Agriculture, Water and Environment
DBYD	Dial Before You Dig
DDA	*Disability Discrimination Act 1992* (Commonwealth)
DECCW	Former Department of Environment, Climate Change and Water
Disability Standards 2010	Disability (Access to Premises – Buildings) Standards (2010)
DPC	Department of Premier and Cabinet
DPE	Former Department of Planning and Environment
DPI	Department of Primary Industries
DPIE	Department of Planning, Industry and Environment
DSAPT	*Disability Standards for Accessible Public Transport 2002*
DUAP	Former Department of Urban Affairs and Planning
EIS	Environmental Impact Statement
EPA	Environment Protection Agency
EP&A Act	*Environmental Planning and Assessment Act 1979* (NSW). Provides the legislative framework for land use planning and development assessment in NSW
EPBC Act	*Environment Protection and Biodiversity Conservation Act 1999* (Commonwealth). Provides for the protection of the environment, especially matters of national environmental significance, and provides a national assessment and approvals process.
EPL	Environmental Protection Licence

Term/ Acronym	Description
ESD	Ecologically sustainable development. Development which uses, conserves and enhances the resources of the community so that ecological processes on which life depends, are maintained and the total quality of life, now and in the future, can be increased
EWMS	environmental work method statement
FM Act	*Fisheries Management Act 1994* (NSW)
FWUP	Ferry Wharf Upgrade Program
HAT	Highest Astronomical Tide
Heritage Act	*Heritage Act 1977*
ICNG	*Interim Construction Noise Guideline*
ISEPP	*State Environmental Planning Policy (Infrastructure) 2007*
KFH	key fish habitat
LAT	Lowest Astronomical Tide
LCVIA	landscape and visual impact assessment
LCZ	landscape character zones
LEP	Local Environmental Plan. A type of planning instrument made under Part 3 of the EP&A Act.
LGA	local government area
LV	low voltage
MCA	multi-criterion analysis
MNES	Matters of national environmental significance under the Commonwealth *Environment Protection and Biodiversity Conservation Act 1999*.
NCA	noise catchment area
NCC	National Construction Code 2019 Volumes 1, 2 and 3 (Formerly Building Code of Australia)
NHL	National Heritage List
NML	noise management level
NPW Act	*National Parks and Wildlife Act 1974*
OCP/OPP	Organochlorine pesticides/organophosphorus pesticides
OEH	Office of Environment and Heritage
OOHW	Out of hours work
PACHCI	*Procedure for Aboriginal Cultural Heritage Consultation and Investigation*
PAH	polycyclic aromatic hydrocarbons
PCTs	Plant Community Types
PMST	Protected Matters Search Tool
POEO Act	*Protection of the Environment Operations Act 1997*
PSI	Preliminary Site Investigation
RBL	rating background level
REF	Review of Environmental Factors
RNE	Register of the National Estate
RNTA	Register of the National Trust of Australia (NSW)
Roads and Maritime	Roads and Maritime Services, now known as Transport for NSW
RTA	Former Roads and Traffic Authority
SDG	*Sustainability Design Guidelines*

Term/ Acronym	Description
SEIA	Socio-economic impact assessment
SEPP	State Environmental Planning Policy. A type of planning instrument made under Part 3 of the EP&A Act.
SHI	NSW State Heritage Inventory
SHR	State Heritage Register
SOHI	Statement of Heritage Impact
SRD SEPP	*State Environmental Planning Policy (State and Regional Development) 2011*
SWMP	Soil and Water Management Plan
Transport	Transport for NSW
TMP	Traffic Management Plan
TRH	total recoverable hydrocarbons
VIS	vegetation information system
WARR Act	*Waste Avoidance and Resource Recovery Act 2001*
WHL	World Heritage List
WMP	Waste Management Plan

Appendix A

Proposal drawings

LOCAL ROAD 7000
TOWONG ROAD

SNOWY VALLEYS LGA (NSW)
AND TOWONG SHIRE (VIC)

REPLACEMENT OF TOWONG BRIDGE OVER MURRAY RIVER

AT 150km EAST OF ALBURY

NEW BRIDGE - 2021 B
BRIDGE No: B12447
DESIGN FILE No: SF2021/200680
DESIGN STANDARD: AS 5100: 2017 - BRIDGE DESIGN

ROAD TRAFFIC LOADING: SM1600

NUMBER OF DESIGN LANES: 3
DESIGN TRAFFIC SPEED: 60km/h (TBC)
ACCOMPANYING LANE FACTORS:

NUMBER OF STANDARD DESIGN LANES LOADED	ACCOMPANYING LANE FACTOR
1	1
2	0.8
3 OR MORE	0.4

FATIGUE LOADING

NUMBER OF HEAVY VEHICLES PER LANE PER DAY: 18
ROUTE FACTOR: 0.5
THE BRIDGE HAS BEEN DESIGNED FOR TRAFFIC LOADING APPLIED TO THE FULL WIDTH BETWEEN EXTERNAL BARRIERS.

HEAVY LOAD PLATFORM LOADING: HLP 400

PROVISION FOR HLP LOADING IS RESTRICTED TO ONE VEHICLE PER CARRIAGEWAY AT ANY ONE TIME, POSITIONED AS SHOWN ON THE DIAGRAM BELOW.
THE DESIGN ACCOUNTS FOR THE ERRORS IN POSITIONING THE HLP VEHICLE UP TO 1m LATERALLY IN EITHER DIRECTION FROM THE SPECIFIED POSITION.
VEHICLE SPEED IS RESTRICTED TO 10km/h.

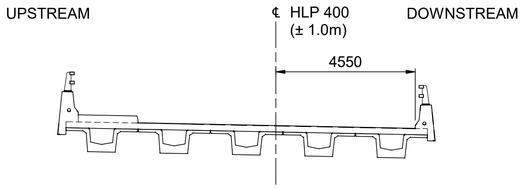

TRAFFIC BARRIER PERFORMANCE LEVEL: REGULAR

PEDESTRIAN LOADING : 5 kPa

MINIMUM RESTRAINT LOADING

500kN IN ANY DIRECTION.

WIND LOADING

WIND TERRAIN CATEGORY: TC2.0
WIND REGION: A3
WIND VELOCITY ULS: 48m/s
WIND VELOCITY SLS: 37m/s
AVERAGE RECURRENCE INTERVAL (ARI) ULS = 2000 YEARS
AVERAGE RECURRENCE INTERVAL (ARI) SLS = 20 YEARS

EARTHQUAKE LOADING

DESIGN CATEGORY: BEDC-2
DESIGN DUCTILITY: 4.0
SUB-SOIL CLASS: CLASS Ce
PROBABILITY FACTOR: 1.0
HAZARD FACTOR: 0.09

FLOOD DATA

20 YEAR ARI	FLOOD VELOCITY (m/s)	FLOOD LEVEL RL (m)	SCOUR DEPTH (m)
(i) ABUTMENT A	2.21	251.13	N/A
(ii) PIER 1	2.21	251.13	N/A
(iii) PIER 2	2.21	251.13	N/A
(iv) ABUTMENT B	2.21	251.13	N/A

FLOOD DATA

100 YEAR ARI	FLOOD VELOCITY (m/s)	FLOOD LEVEL RL (m)	SCOUR DEPTH (m)
(i) ABUTMENT A	2.4	251.17	8.2
(ii) PIER 1	2.4	251.17	3.14
(iii) PIER 2	2.4	251.17	2.22
(iv) ABUTMENT B	2.4	251.17	1.54

FLOOD DATA

2000 YEAR ARI	FLOOD VELOCITY (m/s)	FLOOD LEVEL RL (m)	SCOUR DEPTH (m)
(i) ABUTMENT A	2.8	251.46	8.2
(ii) PIER 1	2.8	251.46	3.79
(iii) PIER 2	2.8	251.46	3.84
(iv) ABUTMENT B	2.8	251.46	1.67

DEPTH OF DEBRIS MATTRESS = 1.2m (MINIMUM)

DIFFERENTIAL SETTLEMENT

10mm BETWEEN ADJACENT PIERS AT THE LEVEL OF THE TOP OF THE RELEVANT PIERS.

REFERENCE DESIGN REPORTS

- REPLACEMENT OF TOWONG BRIDGE (B5947) OVER THE MURRAY RIVER CONCEPT DESIGN
- GEOTECHNICAL INVESTIGATION FOR REMEDIAL MEASURES

JACKING OF BRIDGE DECK FOR BEARING/ HORIZONTAL RESTRAINT REPLACEMENT

THE DESIGN INCLUDES THE FOLLOWING REQUIREMENTS:
- TRAFFIC SHOULDERS ON THE BRIDGE SHALL BE CLOSED TO TRAFFIC.
- TRAFFIC SHALL BE RESTRICTED TO 40km/h
- DYNAMIC LOAD ALLOWANCE OF a=0.1 HAS BEEN INCLUDED IN THE DESIGN.
- HLP VEHICLES SHALL NOT BE ALLOWED ON THE BRIDGE.
- REFER SHEET No'S 10, 11 AND 17 FOR JACKING LOCATIONS AND JACKING LOADS.
- ALL JACKS AT EACH SUBSTRUCTURE SHALL BE HYDRAULICALLY LINKED AND HAVE A CENTRAL MECHANISM TO ENSURE THAT THE SAME VERTICAL DISPLACEMENTS OCCUR AT EACH LIFT POINT AT ALL TIMES DURING THE JACKING OPERATION WITH A TOLERANCE OF 2mm.
- BRIDGE BEARINGS ARE DESIGNED TO BE REPLACED USING LIFTS OF NOT GREATER THAN 10mm.
- STEEL PLATES SHALL BE PLACED BETWEEN CONCRETE BEARING SURFACE AND HYDRAULIC JACK.
- MAXIMUM ULS ALLOWABLE CONTACT PRESSURE BETWEEN CONCRETE SURFACE AND STEEL PLATES SHALL BE 30MPa.
- HORIZONTAL RESTRAINTS TO BE MAINTAINED.
- JACKING UP OPERATIONS SHALL BE CARRIED OUT AT ONLY ONE ABUTMENT AT A TIME.
- JACKS TO BE VERTICAL WITH TAPERED STEEL PLATES ABOVE AND BELOW THE JACKS.

CONSTRUCTION LOADING

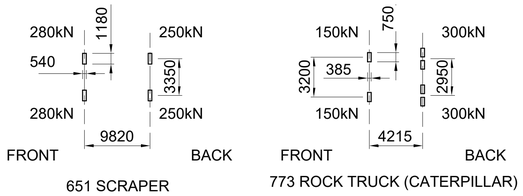

LOADS REPRESENT MAX WORKING WHEEL LOADS.
DESIGN DYNAMIC LOAD FACTOR NOT INCLUDED IN THESE LOADS.
THE DESIGN ADOPTS A DYNAMIC LOAD FACTOR OF 1.1 AND AN ULTIMATE LIMIT STATE LOAD FACTOR OF 1.5.
VEHICLE SPEED IS RESTRICTED TO 10km/h ON THE BRIDGE.
LOAD IS TO BE RESTRICTED TO ONE VEHICLE AT ANY ONE TIME RUNNING WITHIN THE CENTRAL 5m OF THE DECK WITH NO CO-EXISTING LOADING.
MINIMUM CONCRETE STRENGTH AT LOADING: 40MPa.

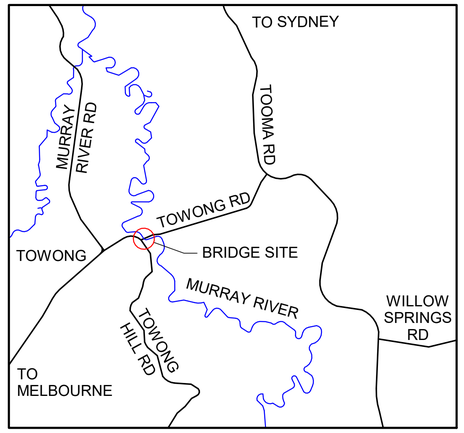

LOCALITY PLAN

THE BRIDGE SITE IS APPROXIMATELY 530km BY ROAD FROM SYDNEY
NOT TO SCALE

SURVEYED DATA POINTS (TO BE COMPLETED AT WAE)

LOCATION	NORTHING	EASTING	RL
ABUTMENT A			
(i) WINGWALLS (LHS)			
(ii) DECK BARRIER (LHS)			
(iii) WINGWALL (RHS)			
(iv) DECK BARRIER (RHS)			
ABUTMENT B			
(i) WINGWALLS (LHS)			
(ii) DECK BARRIER (LHS)			
(iii) WINGWALL (RHS)			
(iv) DECK BARRIER (RHS)			

SURVEY PINS TO BE LOCATED AS SHOWN No. 44
SURVEY PIN LOCATIONS TO BE SURVEYED AFTER CONSTRUCTION AND PRIOR TO OPENING OF TRAFFIC.
THE SURVEYED COORDINATES SHALL BE RECORDED IN THE ABOVE TABLE FOR WORKS-AS- EXECUTED (WAE) DRAWINGS.

NOT FOR CONSTRUCTION

ISSUE	DATE	REVISION	PREP	CHECK	AUTH
B	19-08-2021	ISSUED FOR TENDER	SM	LB	PB
A	09-08-2021	ISSUED FOR TENDER	SM	LB	PB

Cardno
Cardno (NSW/ACT) Pty Ltd | ABN 95 001 145 035
Level 9, The Forum, 203 Pacific Highway
St. Leonards, NSW 2065
Tel: 02 9496 7700 Fax: 02 9439 5170
Web: www.cardno.com.au

SOUTHWEST REGION

DRAWING SET No: DS2021/000055
ISSUE STATUS: PRELIMINARY
ISSUE B | No OF SHEETS 57 | SHEET No 01

DATE PLOTTED: 18/08/2021 2:48:32 PM
FILE PATH: BM 360 / 80021046 Towong Bridge\80021046-MOD-BR-TOWONG BRIDGE_v2020.rvt
PLOT DRIVER: NONE
PEN TABLE: ----

SCHEDULE OF DRAWINGS

SHEET No	SHEET TITLE
01	COVER SHEET
02	SCHEDULE OF DRAWINGS
03	GENERAL ARRANGEMENT - SHEET A
04	GENERAL ARRANGEMENT - SHEET B
05	GENERAL ARRANGEMENT - SHEET C
06	CONSTRUCTION STAGING - SHEET A
07	CONSTRUCTION STAGING - SHEET B
08	CONSTRUCTION STAGING - SHEET C
09	PILES LAYOUT AND DETAILS - SHEET A
10	PILES LAYOUT AND DETAILS - SHEET B
11	ABUTMENT A CONCRETE - SHEET A
12	ABUTMENT A CONCRETE - SHEET B
13	ABUTMENT A REINFORCEMENT - SHEET A
14	ABUTMENT A REINFORCEMENT - SHEET B
15	ABUTMENT A REINFORCEMENT - SHEET C
16	ABUTMENT B CONCRETE - SHEET A
17	ABUTMENT B CONCRETE - SHEET B
18	ABUTMENT B REINFORCEMENT - SHEET A
19	ABUTMENT B REINFORCEMENT - SHEET B
20	ABUTMENT B REINFORCEMENT - SHEET C
21	ABUTMENT RESTRAINT BLOCK DETAILS
22	PIERS 1 AND 2 CONCRETE
23	PIERS 1 AND 2 REINFORCEMENT
24	BEARINGS - SHEET A
25	BEARINGS - SHEET B
26	BEARINGS - SHEET C
27	PSC GIRDERS CONCRETE - SHEET A
28	PSC GIRDERS CONCRETE - SHEET B
29	PSC GIRDERS CONCRETE - SHEET C
30	PSC GIRDERS CONCRETE - SHEET D
31	PSC GIRDERS CONCRETE - SHEET E
32	PSC GIRDERS REINFORCEMENT - SHEET A
33	PSC GIRDERS REINFORCEMENT - SHEET B
34	PSC GIRDERS REINFORCEMENT - SHEET C
35	PSC GIRDERS REINFORCEMENT - SHEET D
36	PSC GIRDERS REINFORCEMENT - SHEET E
37	PSC GIRDERS REINFORCEMENT - SHEET F
38	DECK CONCRETE - SHEET A
39	DECK CONCRETE - SHEET B
40	DECK CONCRETE - SHEET C
41	DECK REINFORCEMENT - SHEET A
42	DECK REINFORCEMENT - SHEET B
43	DECK REINFORCEMENT - SHEET C
44	DECK JOINTS AND COVER PLATES - SHEET A
45	DECK JOINTS AND COVER PLATES - SHEET B
46	BARRIER RAILINGS - SHEET A
47	BARRIER RAILINGS - SHEET B
48	BARRIER RAILINGS - SHEET C
49	APPROACH SLAB CONCRETE - SHEET A
50	APPROACH SLAB CONCRETE - SHEET B
51	APPROACH SLAB REINFORCEMENT - SHEET A
52	APPROACH SLAB REINFORCEMENT - SHEET B
53	SCOUR PROTECTION DETAILS
54	MAINTENANCE ACCESS - SHEET A
55	MAINTENANCE ACCESS - SHEET B
56	BAR SHAPES DIAGRAM - SHEET A
57	BAR SHAPES DIAGRAM - SHEET B

NOT FOR CONSTRUCTION

ISSUE	DATE	REVISION	PREP	CHECK	AUTH
A	09-08-2021	ISSUED FOR TENDER	SM	LB	PB

LOCAL COUNCIL ROAD — SNOWY VALLEYS COUNCIL

REPLACEMENT OF TOWONG BRIDGE

ON TOWONG RD OVER MURRAY RIVER AT TOWONG

SCHEDULE OF DRAWINGS

Cardno

Cardno (NSW/ACT) Pty Ltd | ABN 95 001 145 035
Level 9, The Forum, 203 Pacific Highway
St. Leonards, NSW 2065
Tel: 02 9496 7700 Fax: 02 9439 5170
Web: www.cardno.com.au

SOUTH WEST REGION

NSW GOVERNMENT — Transport for NSW

	PREPARED	CHECKED
DESIGN	J.Guzman	L.Bai
DRAWING	A.Javier	S.Mathie

APPROVED/ DESIGN QA RECORDS: P.Boesch — DIRECTOR

DRAWING SET No. DS2021/000055

BRIDGE No. B12447

ISSUE STATUS: PRELIMINARY

ISSUE A | No OF SHEETS 57 | SHEET No 02

CAD No DS2017-002667-DC-BR-2001(05)

THIS DRAWING IS CONFIDENTIAL AND SHALL ONLY BE USED FOR THE PURPOSE OF THE NOMINATED PROJECT

PRODUCED: 25 September 2020 AT 9:17:17 AM USER: Stuart Mathie
FILE: Z:\Projects\600\PY186100_PARKES BYPASS\Drawings\Bud\05_XrfrRMS-A1-SHT.dwg
PLOT DRIVER: NONE
PEN TABLE: ----

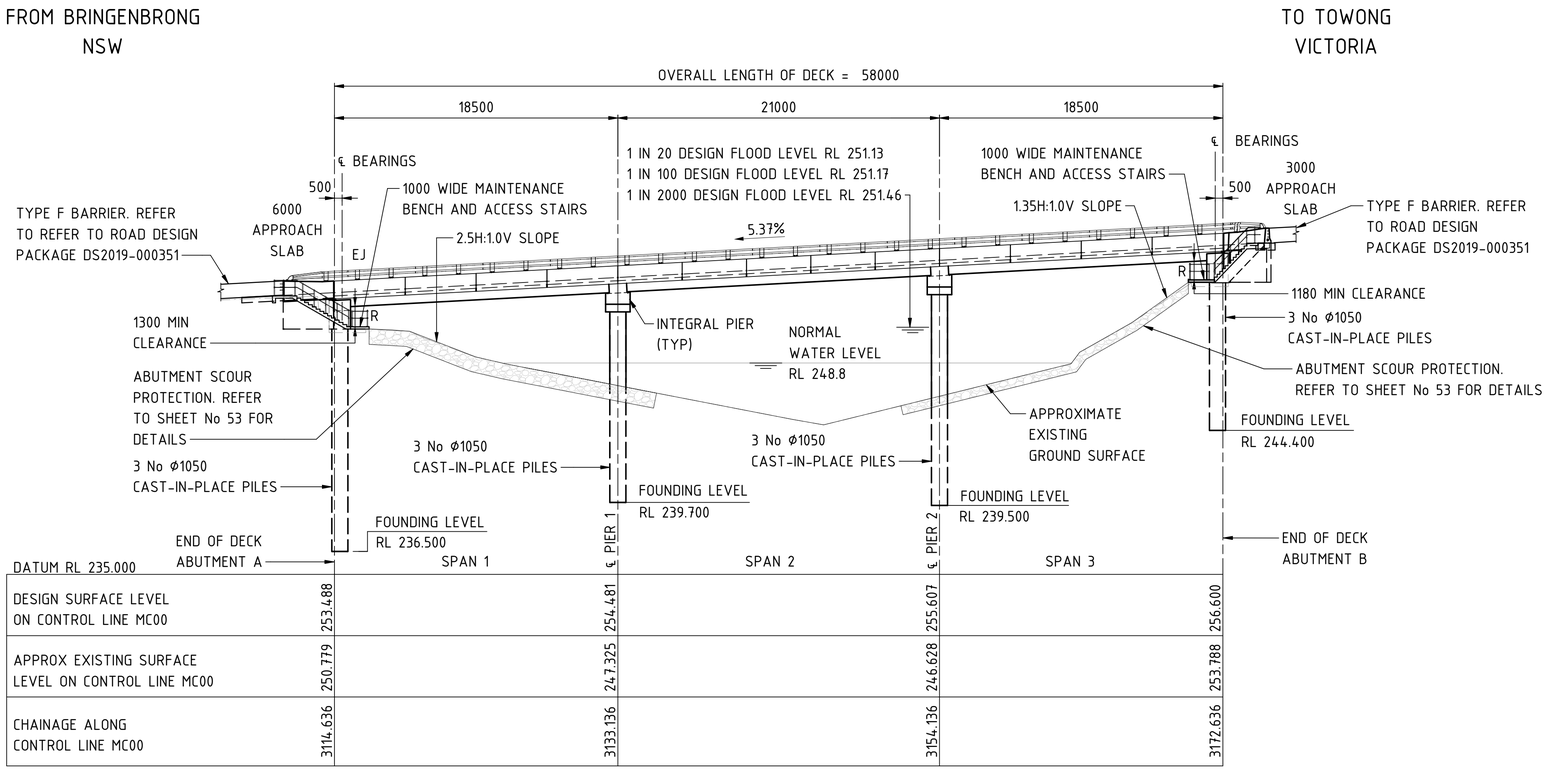

ELEVATION

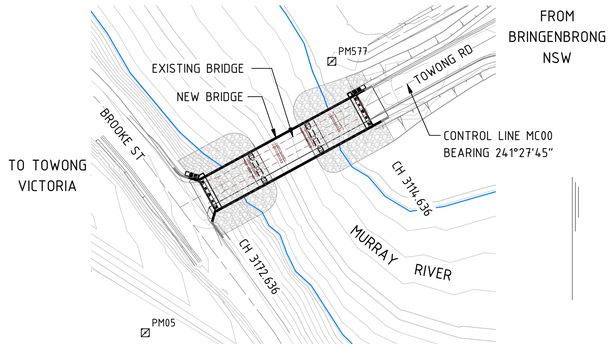

SITE PLAN
SCALE 1:1000

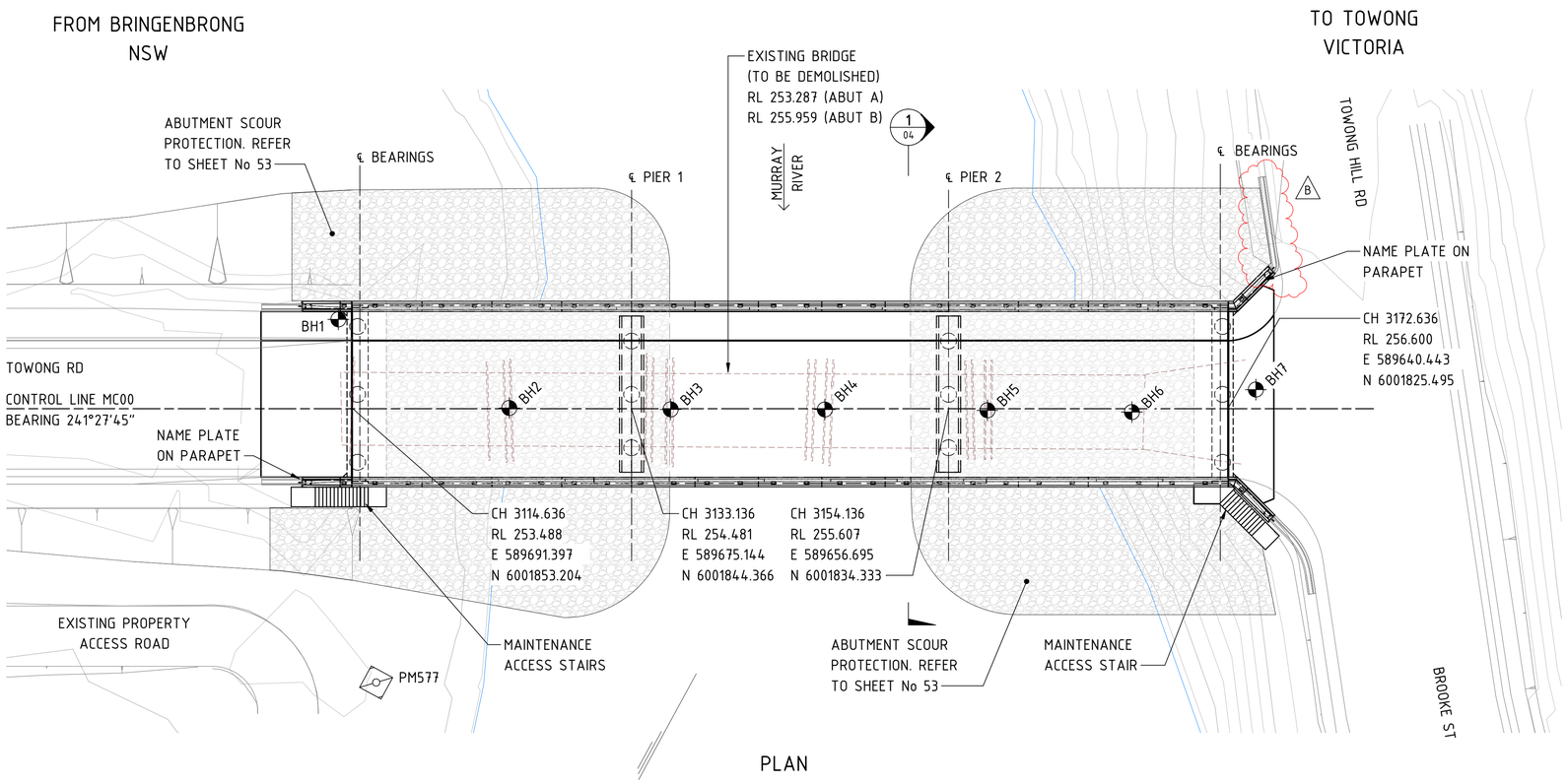

PLAN

GENERAL NOTES

SCALE 0 4 8 12 16 20m — AS SHOWN.

ALL DIMENSIONS ARE IN MILLIMETRES UNLESS NOTED OTHERWISE.
CHAINAGES AND REDUCED LEVELS ARE IN METRES.
REDUCED LEVELS ARE TO AUSTRALIAN HEIGHT DATUM.
COORDINATES ARE TO MGA.
ALL CONCRETE SURFACES THAT ARE VISIBLE TO ROAD USERS OR PEDESTRIANS AND WITHIN 3m ABOVE FINISHED SURFACE LEVEL OR ACCESSIBLE FOOTHOLDS SHALL BE TREATED WITH ANTI-GRAFFITI COATING.
NEW PILES TO BE A MINIMUM OF 1m CLEAR OF EXISTING PILES.
SH DENOTES SHOULDER.
TL DENOTES TRAFFIC LANE.
R DENOTES RESTRAINED BEARINGS.
EJ DENOTES EXPANSION JOINT.
BHx DENOTES GEOTECHNICAL BOREHOLE LOCATION.
PMx PERMANENT MARK OR

NOT FOR CONSTRUCTION

ISSUE	DATE	REVISION	PREP	CHECK	AUTH
B	19-08-2021	ISSUED FOR TENDER	SM	LB	PB
A	09-08-2021	ISSUED FOR TENDER	SM	LB	PB

LOCAL COUNCIL ROAD — SNOWY VALLEYS COUNCIL

REPLACEMENT OF TOWONG BRIDGE

ON TOWONG RD OVER MURRAY RIVER AT TOWONG

GENERAL ARRANGEMENT - SHEET A

Cardno
Cardno (NSW/ACT) Pty Ltd | ABN 95 001 145 035
Level 9, The Forum, 203 Pacific Highway
St. Leonards, NSW 2065
Tel: 02 9496 7700 Fax: 02 9439 5170
Web: www.cardno.com.au

SOUTH WEST REGION
NSW GOVERNMENT Transport for NSW

	PREPARED	CHECKED
DESIGN	J.Guzman	L.Bai
DRAWING	A.Javier	S.Mathie

APPROVED/ DESIGN QA RECORDS: P.Boesch — DIRECTOR

DRAWING SET No. DS2021/000055
BRIDGE No. B12447
ISSUE STATUS PRELIMINARY
ISSUE B | No OF SHEETS 57 | SHEET No 03

CAD No DS2017-002667-DC-BR-2001(05)

THIS DRAWING IS CONFIDENTIAL AND SHALL ONLY BE USED FOR THE PURPOSE OF THE NOMINATED PROJECT

PRODUCED: 25 September 2020 AT 9:17:17 AM USER: Stuart Mathie
FILE: P:\Projects\Projects800\PY186100_PARKES BYPASS\Drawings\Bridge\05_XrfrRMS-A1-SHT.dwg
PLOT DRIVER: NONE
PEN TABLE: ----

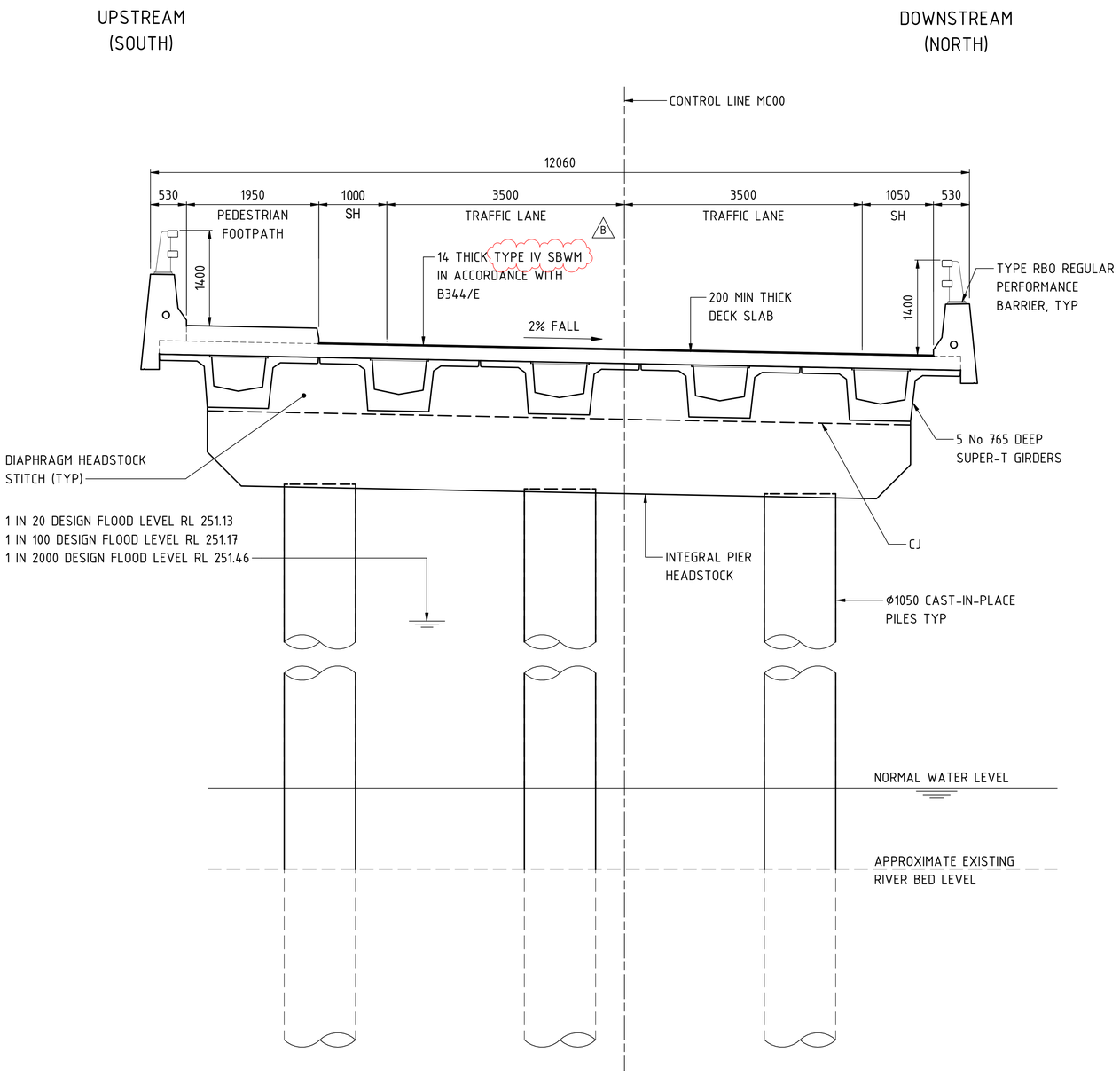

SECTION 1 / 03

GENERAL NOTES

SCALE 0 800 1600 2400 3200 4000m OR AS SHOWN.

FOR OTHER GENERAL NOTES RELATING TO THIS SHEET, SEE SHEET No. 3.

NOT FOR CONSTRUCTION

ISSUE	DATE	REVISION	PREP	CHECK	AUTH
B	19-08-2021	ISSUED FOR TENDER	SM	LB	PB
A	09-08-2021	ISSUED FOR TENDER	SM	LB	PB

LOCAL COUNCIL ROAD — SNOWY VALLEYS COUNCIL

REPLACEMENT OF TOWONG BRIDGE

ON TOWONG RD OVER MURRAY RIVER AT TOWONG

GENERAL ARRANGEMENT - SHEET B

Cardno
Cardno (NSW/ACT) Pty Ltd | ABN 95 001 145 035
Level 9, The Forum, 203 Pacific Highway
St. Leonards, NSW 2065
Tel: 02 9496 7700 Fax: 02 9439 5170
Web: www.cardno.com.au

SOUTH WEST REGION
NSW GOVERNMENT Transport for NSW

	PREPARED	CHECKED
DESIGN	J.Guzman	L.Bai
DRAWING	A.Javier	S.Mathie

APPROVED/ DESIGN QA RECORDS: P.Boesch
DIRECTOR

DRAWING SET No. DS2021/000055
BRIDGE No. B12447
ISSUE STATUS PRELIMINARY
ISSUE B | No OF SHEETS 57 | SHEET No 04

CAD No DS2017-002667-DC-BR-2001(05)

THIS DRAWING IS CONFIDENTIAL AND SHALL ONLY BE USED FOR THE PURPOSE OF THE NOMINATED PROJECT

PRODUCED: 25 September 2020 AT 5:17:17 AM USER: Stuart Mathie
FILE: DS2017-002667-DC-BR-2001(05)_PARKES BYPASS\Drawings\Build\05_Xrf\RMS-A1-SHT.dwg
PLOT DRIVER: PDF
PEN TABLE: ----

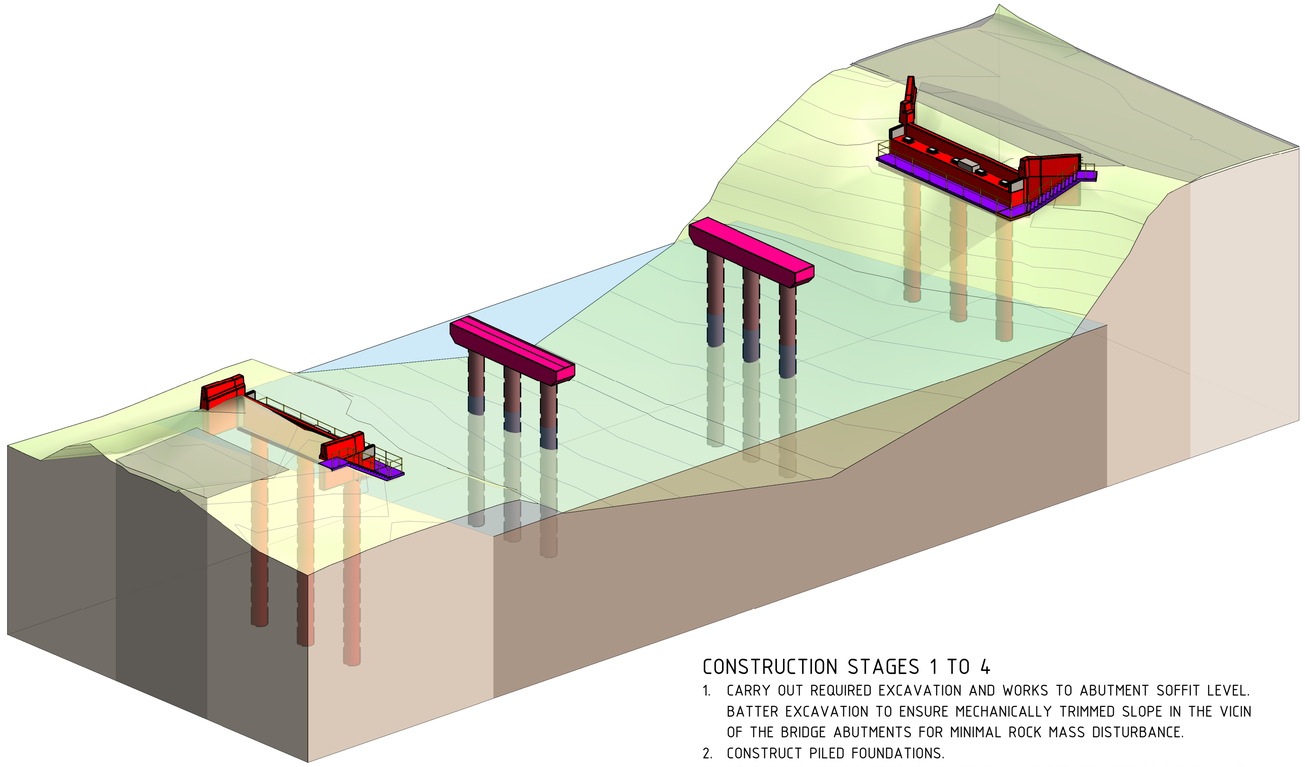

CONSTRUCTION STAGES 1 TO 4

1. CARRY OUT REQUIRED EXCAVATION AND WORKS TO ABUTMENT SOFFIT LEVEL. BATTER EXCAVATION TO ENSURE MECHANICALLY TRIMMED SLOPE IN THE VICIN OF THE BRIDGE ABUTMENTS FOR MINIMAL ROCK MASS DISTURBANCE.
2. CONSTRUCT PILED FOUNDATIONS.
3. CONSTRUCT PIER HEADSTOCK, COLUMNS, ABUTMENT HEADSTOCK, WINGWALLS, MAINTENANCE STAIRS, MAINTENANCE SLABS AND HANDRAILS.
4. CONSTRUCT BACKFILL AND DRAINAGE SYSTEM BEHIND ABUTMENTS TO THE UNDERSIDE OF APPROACH SLAB LEVEL.

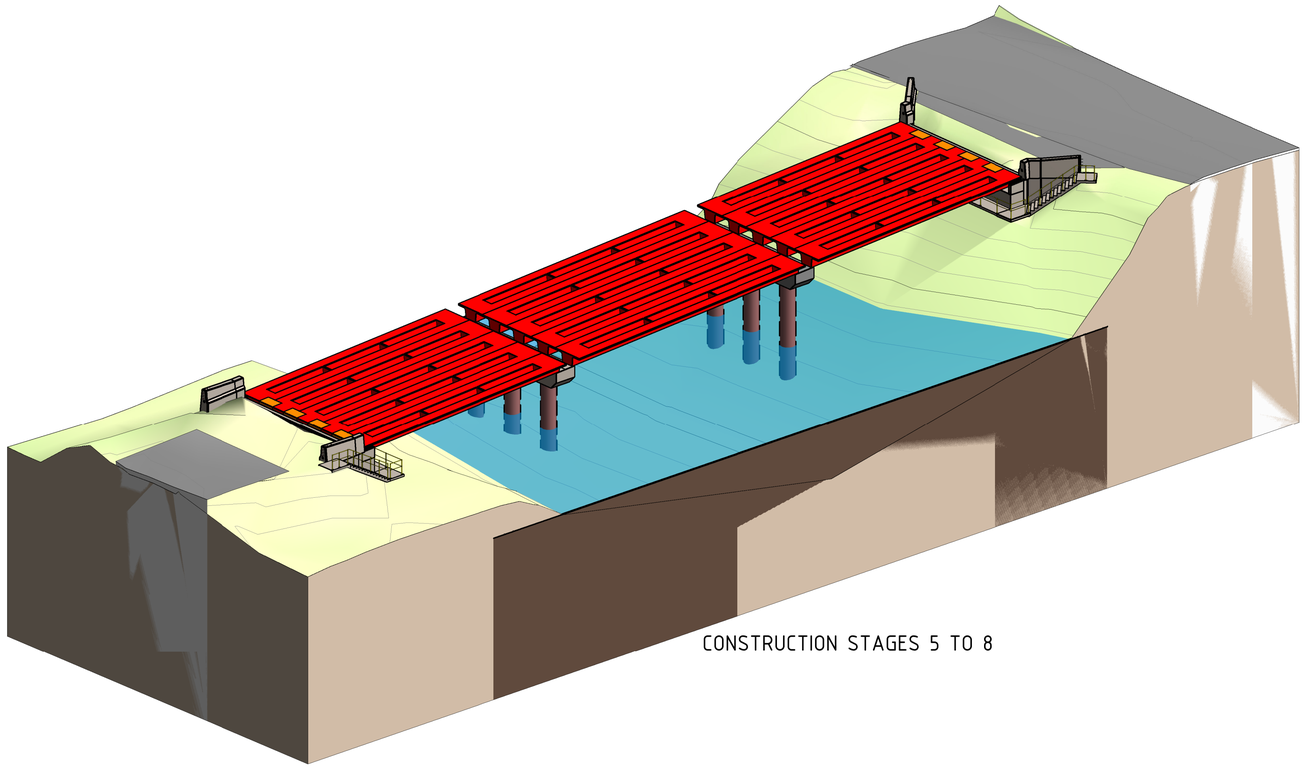

CONSTRUCTION STAGES 5 TO 8

ISSUE	DATE	REVISION
A	09-08-2021	ISSUED FOR TENDER

LOCAL COUNCIL ROAD

REPLACEMENT OF TOW

ON TOWONG RD OVER MURRAY F

CONSTRUCTION STAGING

Cardno (NSW/ACT) Pty Ltd | ABN 95 001 145 035
Level 9, The Forum, 203 Pacific Highway
St. Leonards, NSW 2065
Tel: 02 9496 7700 Fax: 02 9496 6170

PRODUCED: 25 September 2020 AT 9:17:17 AM USER: Stuart Mathie
FILE PATH: N:\Projects\600\PY186100_PARKES BYPASS\Drawings\Build\05_XrfRMS-A1-SHT.dwg
PLOT DRIVER: NONE
PEN TABLE: ----

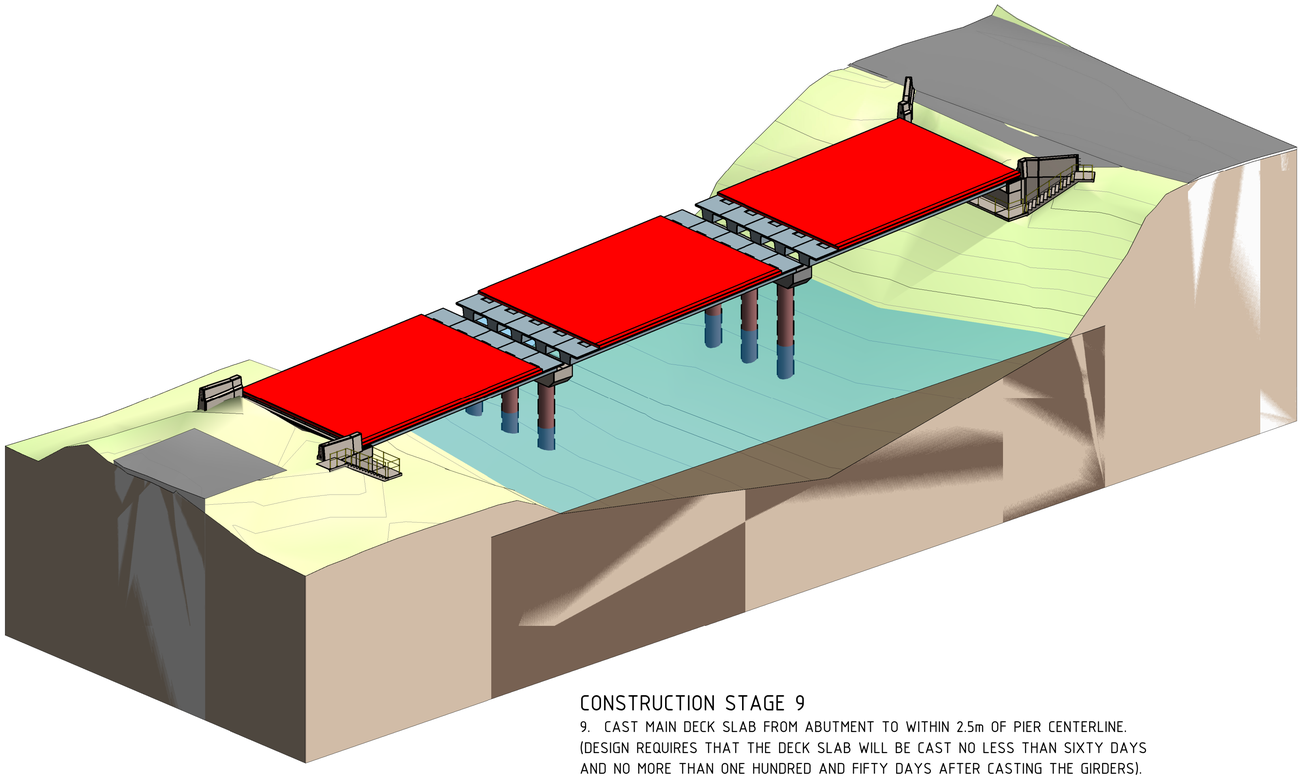

CONSTRUCTION STAGE 9

9. CAST MAIN DECK SLAB FROM ABUTMENT TO WITHIN 2.5m OF PIER CENTERLINE. (DESIGN REQUIRES THAT THE DECK SLAB WILL BE CAST NO LESS THAN SIXTY DAYS AND NO MORE THAN ONE HUNDRED AND FIFTY DAYS AFTER CASTING THE GIRDERS).

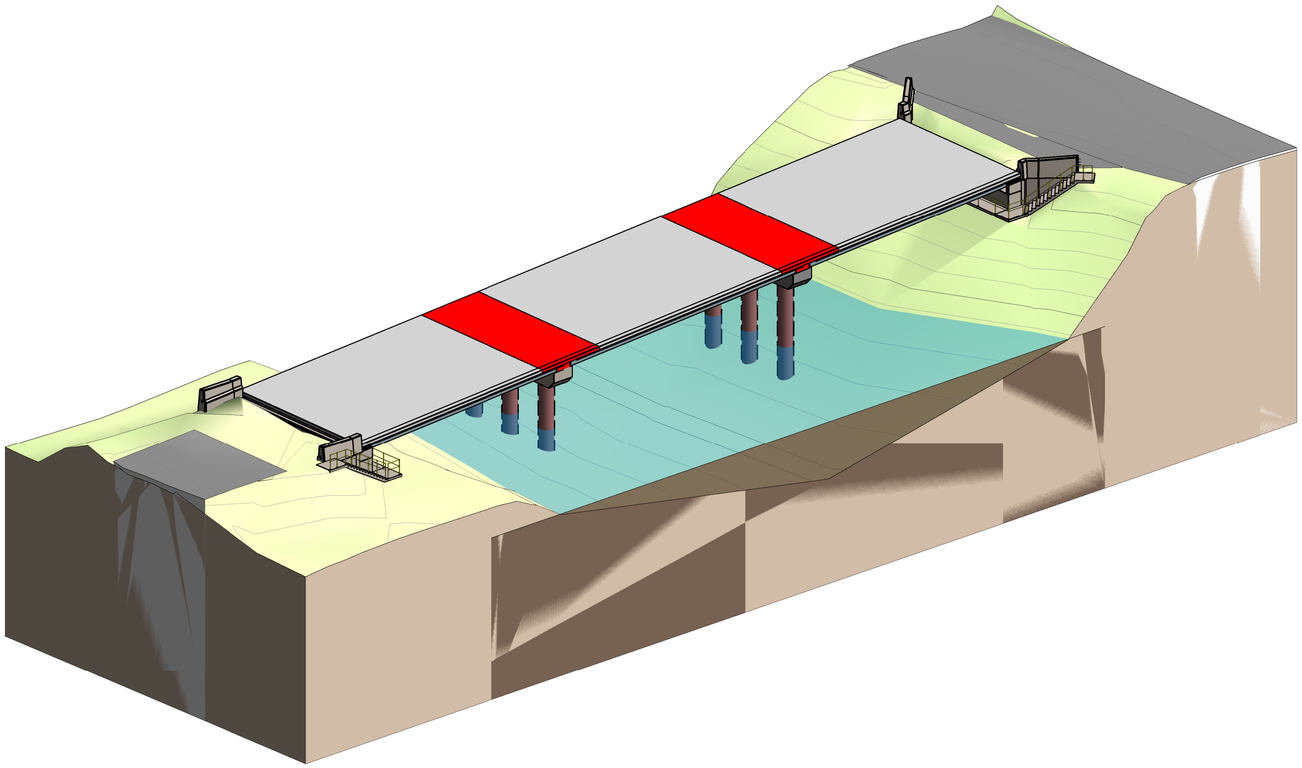

NOT FOR CONSTRUCTION

ISSUE	DATE	REVISION	PREP	CHECK	AUTH
A	09-08-2021	ISSUED FOR TENDER	SM	LB	PB

LOCAL COUNCIL ROAD — SNOWY VALLEYS COUNCIL

REPLACEMENT OF TOWONG BRIDGE

ON TOWONG RD OVER MURRAY RIVER AT TOWONG

CONSTRUCTION STAGING - SHEET B

Cardno
Cardno (NSW/ACT) Pty Ltd | ABN 95 001 145 035
Level 9, The Forum, 203 Pacific Highway
St. Leonards, NSW 2065
Tel: 02 9496 7700 Fax: 02 9439 5170
Web: www.cardno.com.au

SOUTH WEST REGION

NSW GOVERNMENT — Transport for NSW

	PREPARED	CHECKED
DESIGN	J.Guzman	L.Bai
DRAWING	A.Javier	S.Mathie

APPROVED/ DESIGN QA RECORDS: P.Boesch
DIRECTOR

DRAWING SET No. DS2021/000055

BRIDGE No. B12447

ISSUE STATUS: PRELIMINARY

ISSUE A | No OF SHEETS 57 | SHEET No 07

CAD No DS2017-002667-DC-BR-2001(05)

THIS DRAWING IS CONFIDENTIAL AND SHALL ONLY BE USED FOR THE PURPOSE OF THE NOMINATED PROJECT

PRODUCED: 25 September 2020 AT 9:17:17 AM USER: Stuart Mathie
FILE PATH: V:\Projects\600\PY186100_PARKES BYPASS\Drawings\Build\05_XrfrRMS-A1-SHT.dwg
PLOT DRIVER: NONE
PEN TABLE: ----

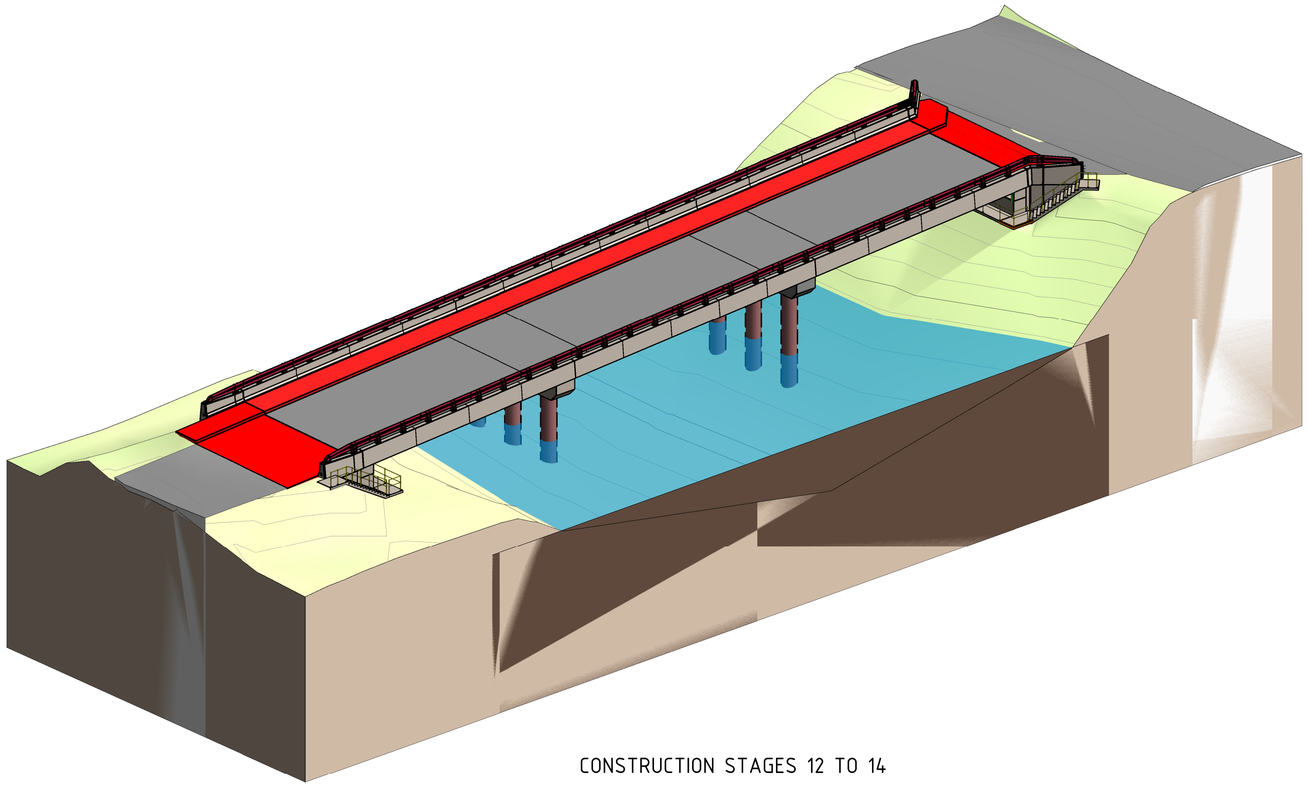

CONSTRUCTION STAGES 12 TO 14

NOT FOR CONSTRUCTION

ISSUE	DATE	REVISION	PREP	CHECK	AUTH
A	09-08-2021	ISSUED FOR TENDER	SM	LB	PB

LOCAL COUNCIL ROAD — SNOWY VALLEYS COUNCIL

REPLACEMENT OF TOWONG BRIDGE

ON TOWONG RD OVER MURRAY RIVER AT TOWONG

CONSTRUCTION STAGING - SHEET C

Cardno
Cardno (NSW/ACT) Pty Ltd | ABN 95 001 145 035
Level 9, The Forum, 203 Pacific Highway
St. Leonards, NSW 2065
Tel: 02 9496 7700 Fax: 02 9439 5170
Web: www.cardno.com.au

SOUTH WEST REGION
NSW GOVERNMENT — Transport for NSW

	PREPARED	CHECKED
DESIGN	J.Guzman	L.Bai
DRAWING	A.Javier	S.Mathie

APPROVED/ DESIGN QA RECORDS: P.Boesch
DIRECTOR

DRAWING SET No. DS2021/000055
BRIDGE No. B12447
ISSUE STATUS: PRELIMINARY
ISSUE A | No OF SHEETS 57 | SHEET No 08

CAD No DS2017-002667-DC-BR-2001(05)

THIS DRAWING IS CONFIDENTIAL AND SHALL ONLY BE USED FOR THE PURPOSE OF THE NOMINATED PROJECT

PRODUCED: 25 September 2020 AT 9:17:17 AM USER: Stuart Mathie
FILE: DS2017-002667-DC-BR-2001(05)_PARKES BYPASS\Drawings\Build\05_XrfRMS-A1-SHT.dwg
PLOT DRIVER: NONE
PEN TABLE: ----

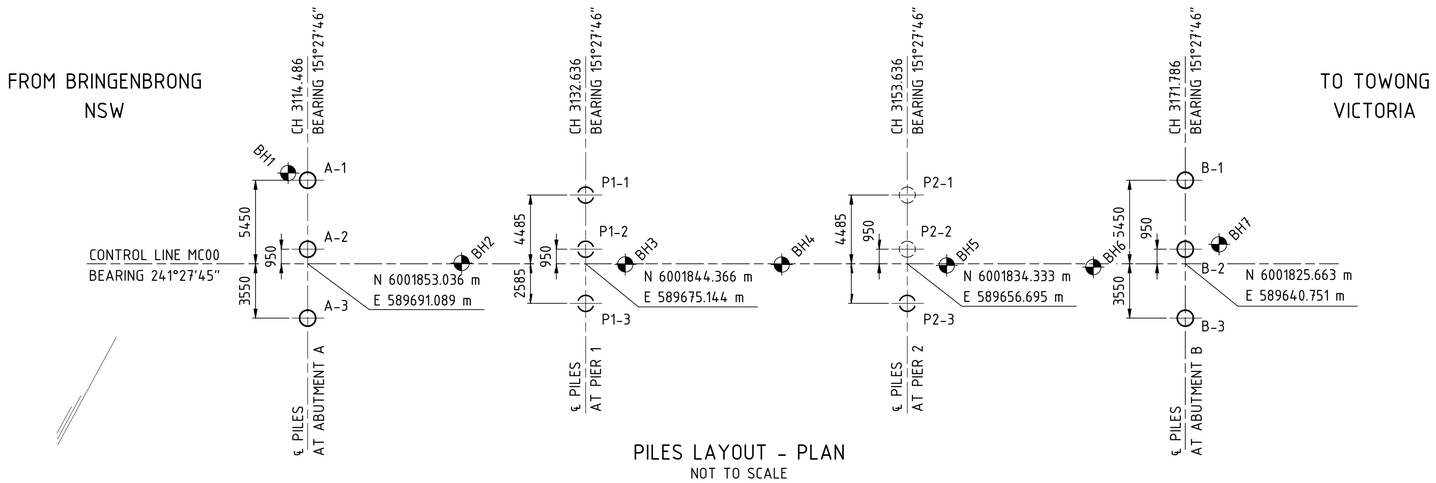

PILES LAYOUT - PLAN
NOT TO SCALE

TABLE 1 - PILE SCHEDULE

B

LOCATION	PILE No.	PILE DIAMETER (mm)	PILE LEVELS		MINIMUM LENGTH OF PILE 'L'	ESTIMATED TOP OF SOCKET MATERIAL RL (m)	ROCK SOCKET MATERIAL	MINIMUM ROCK SOCKET LENGTH 'Ls' (m)	DESIGN MINIMUM AXIAL COMPRESSION AT TOP OF PILE		DESIGN MAXIMUM AXIAL COMPRESSION AT TOP OF PILE		DESIGN MAXIMUM BENDING MOMENT ALONG THE PILE	PILE INTEGRITY TESTING (PIT)	PILE TO BE PIT TESTED
			CONTRACT LEVEL RL 'B'	TOP OF PILE RL 'A'					ULS (kN)	SLS (kN)	ULS (kN)	SLS (kN)	ULS (kNm)		
ABUT A	A-1	1050	236.500	251.281	14.781	241.3	3R6 - 1.1m 3R4 - 3.2m 3R3 - 0.5m	4.8	38	275	3025	1995	1250	-	-
	A-2	1050	236.500	251.189	14.689	241.3								SL	♦
	A-3	1050	236.500	251.101	14.601	241.3								-	-
PIER 1	P1-1	1050	239.700	252.349	12.649	243.5	3R6 - 1.4m 3R4 - 1.5m 3R3 - 0.9m	3.8	285	640	5560	3640	2755	-	-
	P1-2	1050	239.700	252.278	12.578	243.5								SL	♦
	P1-3	1050	239.700	252.207	12.507	243.5								-	-
PIER 2	P2-1	1050	239.500	253.475	13.975	246.1	3R5 - 0.4m 3R4 - 1.4m 3R5 - 0.6m 3R4 - 1.2m 3R3 - 0.7m 3R2 - 1.3m 3R1 - 1.0m	6.6	340	690	5530	3595	2880	-	-
	P2-2	1050	239.500	253.404	13.904	246.1								SL	♦
	P2-3	1050	239.500	253.333	13.833	246.1								-	-
ABUT B	B-1	1050	244.400	254.339	9.939	254.7	3R6 - 2.0m 3R5 - 4.4m 3R4 - 2.0m 3R3 - 0.4m 3R6 - 1.0m 3R3 - 0.5m	10.3	180	425	2920	1950	1028	-	-
	B-2	1050	244.400	254.247	9.847	254.7								SL	♦
	B-3	1050	244.400	254.159	9.759	254.7								-	-

TABLE 2 - ROCK STRENGTH CRITERIA

ROCK CLASS	ROCK STRENGTH DESCRIPTION (TO AS 1726)	UNIAXIAL COMPRESSIVE STRENGTH 'UCS' (MPa)	DESIGN ULTIMATE END BEARING q_{bULT} (MPa)	ULTIMATE SHAFT ADHESION T_{ULT} (kPa)
3R6	EXTREMELY LOW	<1	3	150
3R5	VERY LOW	1-2	5	350
3R4	LOW	2-6	8	550
3R3	MEDIUM	6-20	15	1750
3R2	HIGH	20-60	25	2500
3R1	VERY HIGH AND EXTREMELY HIGH	>60	35	9000

INTEGRITY TEST TUBES WHERE REQUIRED.
ø60.3 x 2.9 CHS GRADE C350LD TO AS1163 FOR FULL LENGTH OF PILE. TUBES TO BE SEALED AT THE BOTTOM WITH A WELDED CAP PLATE AND HAVE A REMOVABLE CAP AT THE TOP (PROVIDE 200 COVER TO BASE OF PILE)

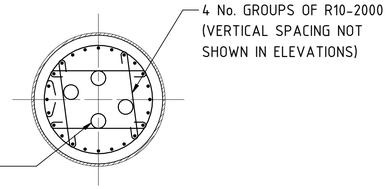

PILE INTEGRITY
TESTING TUBES
0 250 500 750 1000 1250mm

PILE INTEGRITY TESTING

PILE INTEGRITY TESTING SHALL BE CARRIED OUT ON 20% OF PILES OR MINIMUM 4 PILES WHICHEVER IS HIGHER, IN ACCORDANCE WITH SPECIFICATION AS 2159 AND TfNSW BTD 2011/08.

♦ DENOTES TEST LOCATIONS SHOWN ON PILE SCHEDULE. CHANGES TO PILE TESTING SHALL BE APPROVED BY THE PRINCIPAL.

SL DENOTES SONIC LOGGING

BORED PILES

ROCK SOCKET DESIGNS ARE BASED ON THE ULTIMATE GEOTECHNICAL STRENGTH PARAMETERS IN TABLE 2, ADOPTED FOR ULTIMATE LOADING.
GEOTECHNICAL STRENGTH REDUCTION FACTOR ϕg OF 0.4 HAS BEEN ADOPTED.
ROCK SOCKET SIDE WALL ROUGHNESS SHOULD BE R2 OR BETTER. R2 MEANS GROOVES OF DEPTH OF 1-4mm, WIDTH GREATER THAN 2mm, AT SPACING 50-200mm OVER AT LEAST 90% OF THE PILE SOCKET SIDE WALLS.
BENTONITE OR OTHER DRILLING FLUIDS SHALL NOT BE USED TO SUPPORT THE SIDES OF THE EXCAVATED PILE HOLE.
PILE CONSTRUCTION SHALL BE IN ACCORDANCE WITH TfNSW SPECIFICATION B58.
TOP OF ROCK SOCKET LEVEL, ROCK SOCKET LENGTH AND FOUNDING ROCK CLASSIFICATION SHALL BE VERIFIED ON SITE BY A QUALIFIED AND EXPERIENCED ENGINEERING GEOLOGIST OR GEOTECHNICAL ENGINEER PRIOR TO REPLACEMENT OF THE PILE CONCRETE.
ROCK SOCKET LENGTH AND FOUNDING ROCK UNIT SHOWN IN TABLE 1 ARE MINIMUM REQUIREMENTS.
FIELD ASSESSMENT OF ROCK STRENGTH SHALL BE IN ACCORDANCE WITH AS 1726.
THE ROCK SOCKET BASE AND SHAFT SHALL BE CLEANED IMMEDIATELY PRIOR TO INSTALLATION OF REINFORCEMENT.
A QUALIFIED AND EXPERIENCED ENGINEERING GEOLOGIST OR GEOTECHNICAL ENGINEER SHALL REVIEW THE ACTUAL PROFILE OF THE ROCK SOCKET LEVEL AND ADJUST THE FOUNDING LEVEL IF REQUIRED TO ACHIEVE THE DESIGN GEOTECHNICAL STRENGTH TO RESIST THE APPLIED STRUCTURAL LOADING.
IF THE FOUNDING LEVEL DETERMINED ON SITE (BASED ON THE ACTUAL TOP OF FOUNDING ROCK LEVEL IDENTIFIED) VARIES FROM THE ESTIMATED VALUES GIVEN IN TABLE 1 BY MORE THAN 0.5m, THE DESIGNER'S REPRESENTATIVE'S ADVICE SHALL BE SOUGHT PRIOR TO PLACEMENT OF THE PILE CONCRETE.
BASE OF THE SOCKET SHALL BE CLEANED USING MECHANICAL AND/OR AIR LIFT TECHNIQUES. A REVIEW OF THE SOCKET LENGTH WILL BE REQUIRED IF CLEANING TECHNIQUES ARE NOT EFFECTIVE AS DETERMINED ON SITE BY A QUALIFIED AND EXPERIENCED ENGINEERING GEOLOGIST OR GEOTECHNICAL ENGINEER.
IF FRACTURED ROCK OR OTHER UNSTABLE MATERIAL IS ENCOUNTERED DURING PILE DRILLING, THE CONTRACTOR SHALL ENSURE THAT COLLAPSE OF MATERIAL INTO THE EXCAVATION DOES NOT OCCUR.

GENERAL NOTES

SCALE 0 4 8 12 16 20m

CONCRETE EXPOSURE CLASSIFICATION FOR PILES: B2
MINIMUM 28 DAYS COMPRESSIVE STRENGTH OF CONCRETE FOR PILES SHALL BE 50MPa.
CONCRETE WORKS TO COMPLY WITH TfNSW SPECIFICATION B80.
ALL PILES SHALL BE CONSTRUCTED IN ACCORDANCE WITH TfNSW QA SPECIFICATION B58.
THE PLACING OF CONCRETE IN THE PILES SHALL BE CARRIED OUT IN ONE CONTINUOUS OPERATION UNLESS OTHERWISE SPECIFIED.
BHx DENOTES GEOTECHNICAL BOREHOLE LOCATION.

NOT FOR CONSTRUCTION

ISSUE	DATE	REVISION	PREP	CHECK	AUTH
B	19-08-2021	ISSUED FOR TENDER	SM	LB	PB
A	09-08-2021	ISSUED FOR TENDER	SM	LB	PB

LOCAL COUNCIL ROAD — SNOWY VALLEYS COUNCIL

REPLACEMENT OF TOWONG BRIDGE

ON TOWONG RD OVER MURRAY RIVER AT TOWONG

PILES LAYOUT AND DETAILS - SHEET A

Cardno
Cardno (NSW/ACT) Pty Ltd | ABN 95 001 145 035
Level 9, The Forum, 203 Pacific Highway
St Leonards, NSW 2065
Tel: 02 9496 7700 Fax: 02 9439 5170
Web: www.cardno.com.au

SOUTH WEST REGION
NSW GOVERNMENT | Transport for NSW

	PREPARED	CHECKED
DESIGN	J.Guzman	L.Bai
DRAWING	A.Javier	S.Mathie
APPROVED/ DESIGN QA RECORDS	P.Boesch	
DIRECTOR		

DRAWING SET No. DS2021/000055
BRIDGE No. B12447
ISSUE STATUS PRELIMINARY
ISSUE B | No OF SHEETS 57 | SHEET No 09

CAD No DS2017-002667-DC-BR-2001(05)

THIS DRAWING IS CONFIDENTIAL AND SHALL ONLY BE USED FOR THE PURPOSE OF THE NOMINATED PROJECT

PRODUCED: 25 September 2020 AT 9:17:17 AM USER: Stuart Mathie
FILE PATH: \\Projects\8800\PT181100_PARKES BYPASS\Drawings\Build\05_XrfRMS-A1-SHT.dwg
PLOT DRIVER: PDF
PEN TABLE: ----

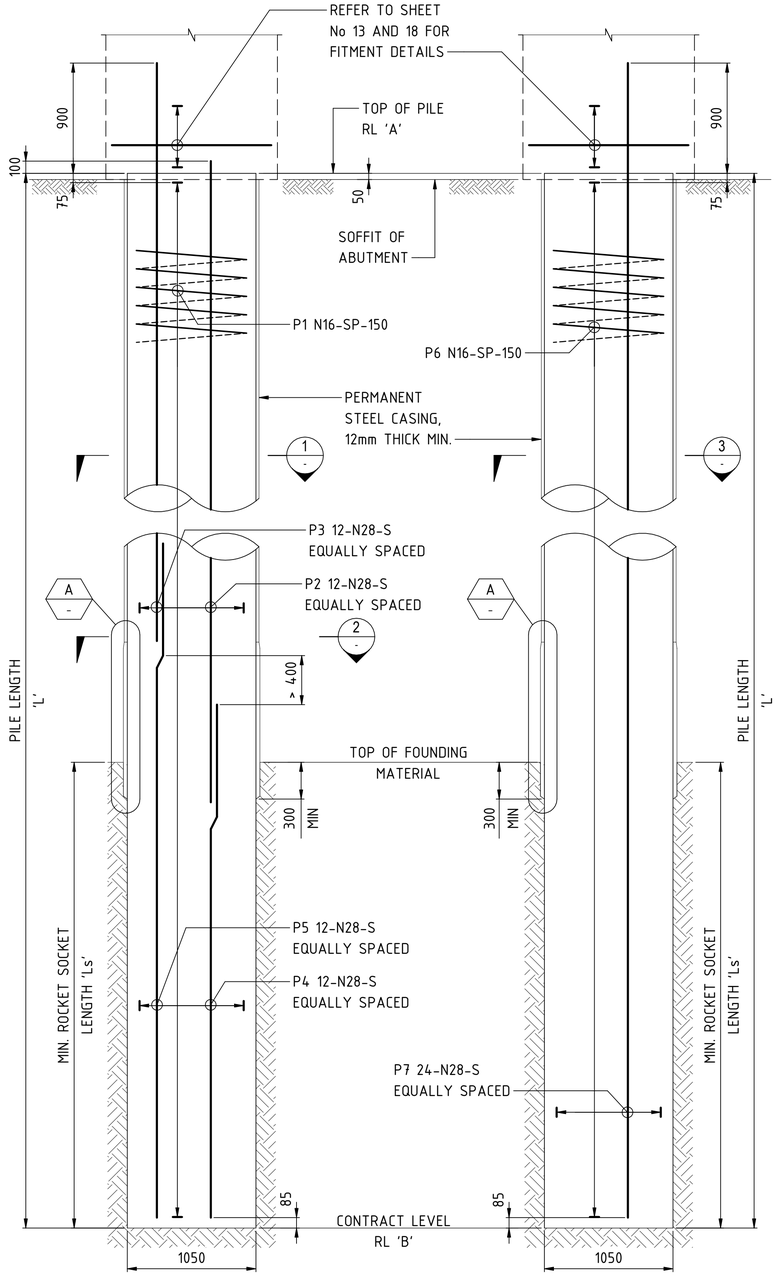

ABUTMENT A PILE ELEVATION
FOR VALUES OF 'A', 'B', 'L' AND 'Ls'
SEE TABLE 1 ON SHEET No. 9

ABUTMENT B PILE ELEVATION
FOR VALUES OF 'A', 'B', 'L' AND 'Ls'
SEE TABLE 1 ON SHEET No. 9

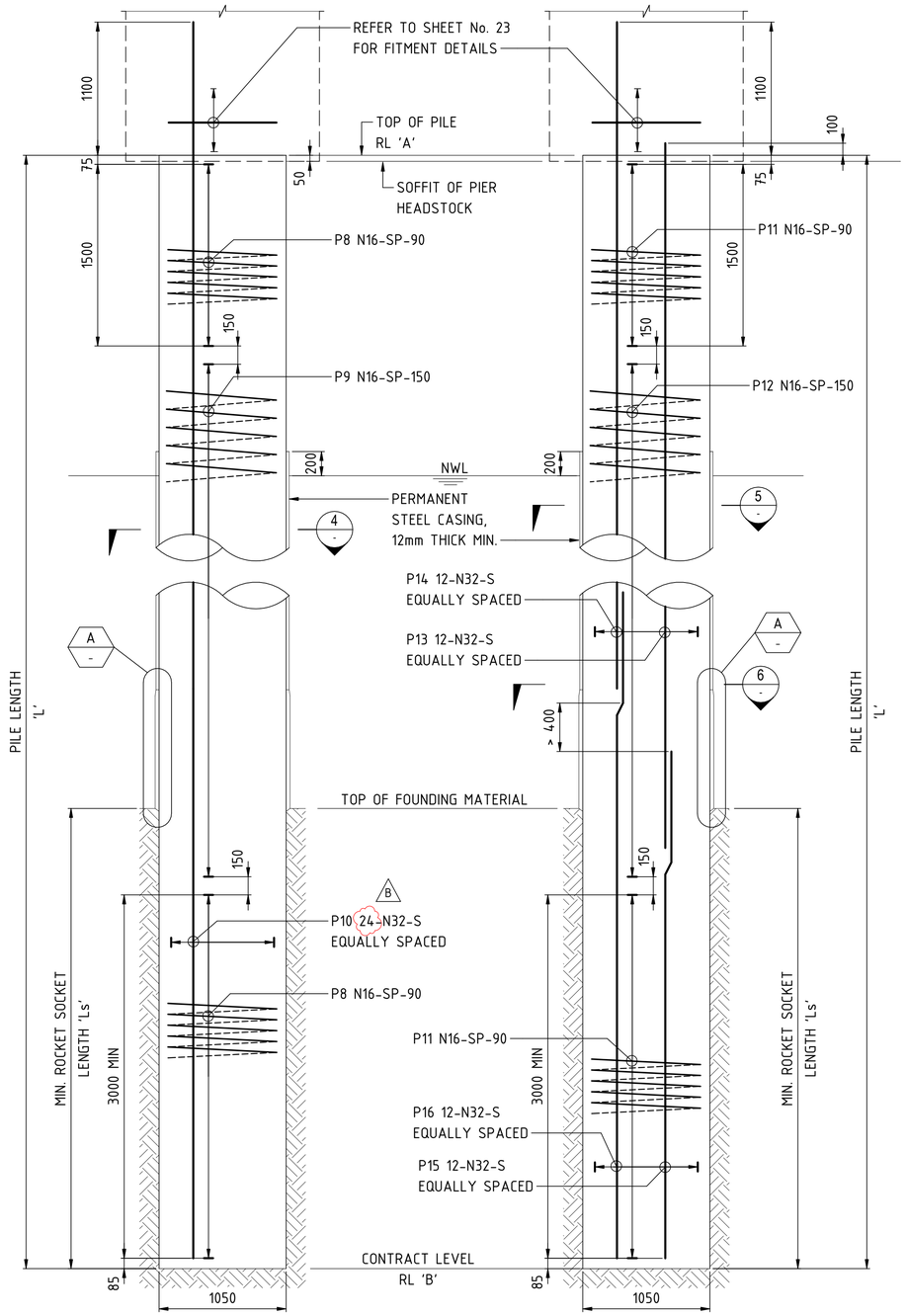

PIER 1 PILE ELEVATION
FOR VALUES OF 'A', 'B', 'L' AND 'Ls'
SEE TABLE 1 ON SHEET No. 9

PIER 2 PILE ELEVATION
FOR VALUES OF 'A', 'B', 'L' AND 'Ls'
SEE TABLE 1 ON SHEET No. 9

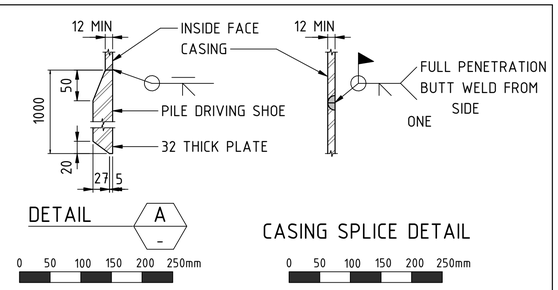

REINFORCEMENT

REQUIRED CONCRETE COVER TO REINFORCEMENT NEAREST CONCRETE SURFACE SHALL BE 80mm UNLESS SPECIFIED OTHERWISE.
UNLESS OTHERWISE SHOWN ON THE DRAWINGS, LAPS ON ADJACENT BARS ON ANY FACE SHALL BE STAGGERED (OFFSET) BY NO LESS THAN THE LAP LENGTH.
HELICAL REINFORCEMENT SHALL BE SPLICED WITHIN ITS LENGTH EITHER BY WELDING OR MECHANICAL MEANS.
HELIX SHALL BE ANCHORED AT EACH END WITH 1.5 TURNS ADJUSTED TO ZERO PITCH AND ANCHORED BY A STANDARD HOOK AROUND A MAIN BAR.
UNLESS OTHERWISE SPECIFIED, THE MINIMUM DEVELOPMENT LENGTHS AND LENGTHS OF LAPS SHALL BE AS FOLLOWS:

BAR SIZE:	N12	N16	N20	N24	N28	N32	N36
a) LAP LENGTH - HORIZONTAL BARS WITH >300mm OF CONCRETE CAST BELOW THE BAR	-	-	-	-	-	-	-
b) LAP LENGTH - OTHER BARS:	350	500	650	900	1150	1400	1700
c) DEVELOPMENT LENGTH:	350	500	600	750	900	1100	1350

LAPS NOT SHOWN ON THE DRAWINGS SHALL BE STAGGERED SO THAT NO MORE THAN 50% OF BARS ARE LAPPED IN ANY ONE FACE OF CROSS SECTION.
WHERE MORE THAN 50% OF BARS ARE LAPPED IN ANY ONE FACE OF CROSS SECTION, THE LAPS SHOWN IN THE TABLE ABOVE SHALL BE INCREASED BY A FACTOR OF 1.3.
CLEAR DISTANCE BETWEEN LAPPED BARS SHALL NOT EXCEED 3 x THE BAR DIAMETER.
REINFORCEMENT MAY BE DISPLACED SLIGHTLY WHERE NECESSARY TO CLEAR SPLICE BARS OR GENERAL FITMENTS.
PILING CAGES TO BE FABRICATED 1m LONGER AT THE BOTTOM WITH CLOSED TIES FOR TOLERANCE AND ADJUSTABILITY TO CUT THE CAGE ON SITE.

DRIVING SHOE

CONTRACTOR IS RESPONSIBLE FOR ASSESSING GROUND CONDITIONS IN ORDER TO DETERMINE BEST METHODOLOGY FOR INSTALLING PERMANENT CASING. CASING INSTALLATION TO COMPLY WITH CLAUSE 6.2 OF TfNSW B58. DESIGN ASSUMES CASING WILL BE DRIVEN TO TOP OF ROCK PRIOR TO DRILLING INTO ROCK AND SUBSEQUENT DRIVING OF CASING.
PERMANENT CASING SHALL BE GRADE 350 TO AS/NZS 3678.

GENERAL NOTES

SCALE 0 500 1000 1500 2000 2500mm OR AS SHOWN

FOR OTHER GENERAL NOTES RELATING TO THIS SHEET, SEE SHEET No. 9

NOT FOR CONSTRUCTION

ISSUE	DATE	REVISION	PREP	CHECK	AUTH
B	19-08-2021	ISSUED FOR TENDER	SM	LB	PB
A	09-08-2021	ISSUED FOR TENDER	SM	LB	PB

LOCAL COUNCIL ROAD — SNOWY VALLEYS COUNCIL

REPLACEMENT OF TOWONG BRIDGE

ON TOWONG RD OVER MURRAY RIVER AT TOWONG

PILES LAYOUT AND DETAILS - SHEET B

Cardno (NSW/ACT) Pty Ltd | ABN 95 001 145 035
Level 9, The Forum, 203 Pacific Highway
St. Leonards, NSW 2065
Tel: 02 9496 7700 Fax: 02 9439 5170
Web: www.cardno.com.au

SOUTH WEST REGION
NSW GOVERNMENT Transport for NSW

	PREPARED	CHECKED
DESIGN	J.Guzman	L.Bai
DRAWING	A.Javier	S.Mathie
APPROVED/ DESIGN QA RECORDS	P.Boesch	
DIRECTOR		

DRAWING SET No. DS2021/000055
BRIDGE No. B12447
ISSUE STATUS PRELIMINARY
ISSUE B | No OF SHEETS 57 | SHEET No 10

CAD No DS2017-002667-DC-BR-2001(05)

THIS DRAWING IS CONFIDENTIAL AND SHALL ONLY BE USED FOR THE PURPOSE OF THE NOMINATED PROJECT

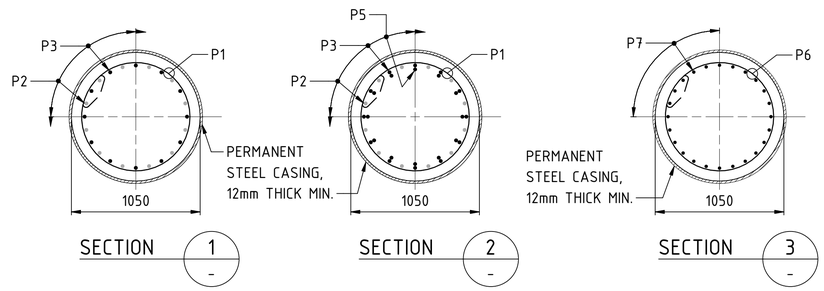

SECTION 1 - | SECTION 2 - | SECTION 3 -

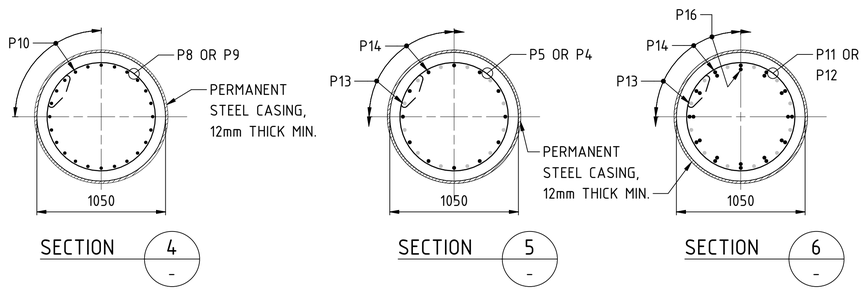

SECTION 4 - | SECTION 5 - | SECTION 6 -

PRODUCED: 25 September 2020 AT 9:17:17 AM USER: Stuart Mathie
FILE: C:\Users\smathie\AppData\Local\Temp\acad_PAPERS\Projects\8000\PT181100_PARKES BYPASS\Drawings\Build\05_Xrf\RMS-A1-SHT.dwg
PLOT DRIVER: PDF
PEN TABLE: ----

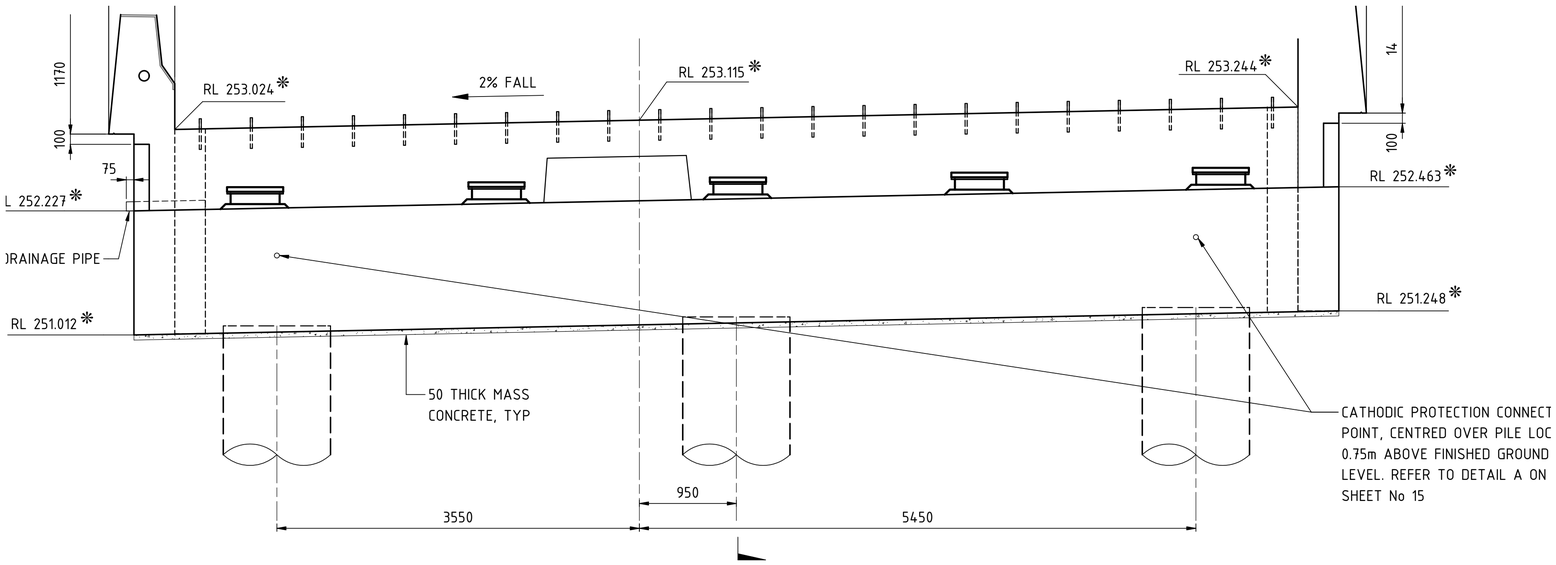

ELEVATION

# DENOTES RL GIVEN TO FINISHED LEVEL AND TOP OF COVER PLATE

* DENOTES RL ON FRONT OF HEADSTOCK AND CURTAIN WALL

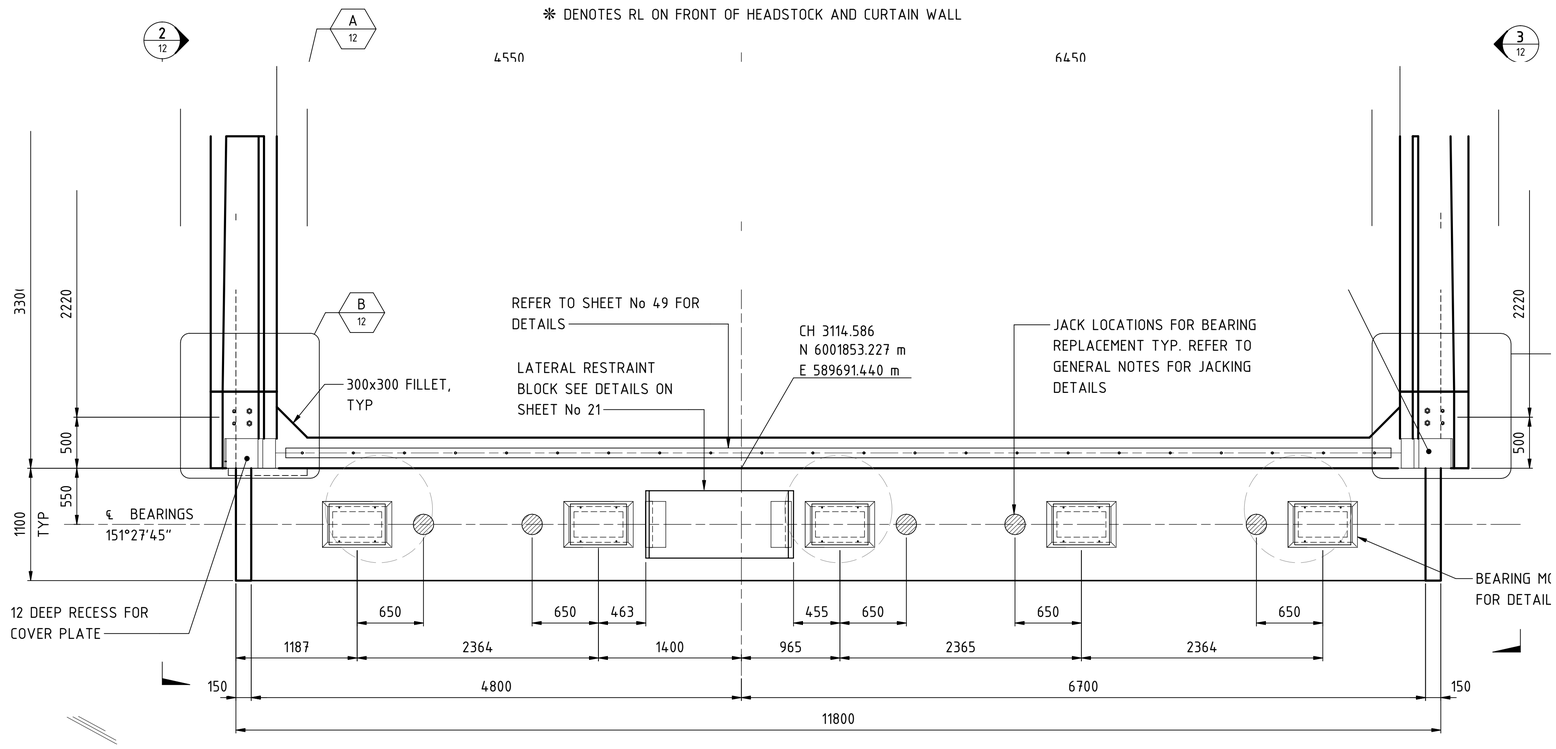

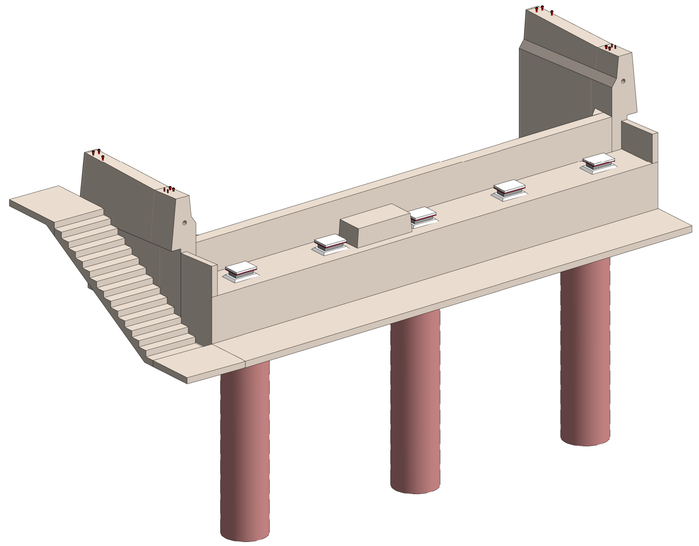

GENERAL NOTES

SCALE 0 600 1200 1800 2400 3000mm

OR AS SHOWN.

CONCRETE EXPOSURE CLASSIFICATION: B2.
MINIMUM 28 DAY COMPRESSIVE STRENGTH OF ALL CONCRETE SHALL BE 50MPa.
MINIMUM THICKNESS OF MASS CONCRETE SHALL BE 50mm WITH A MINIMUM 28 DAY COMPRESSIVE STRENGTH OF 20MPa UNLESS SPECIFIED OTHERWISE.
CONCRETE WORKS SHALL BE IN ACCORDANCE WITH TfNSW SPECIFICATION B80.
EDGES SHALL BE CHAMFERED 20x20 AND RE-ENTRANT ANGLES FILLETED 20x20 UNLESS SPECIFIED OTHERWISE.
NCF DENOTES NO CHAMFER OR FILLET.
STAINLESS STEEL DOWELS SHALL BE GRADE 304 IN ACCORDANCE WITH ASTM A276.
STEEL ITEMS (EXCLUDING STAINLESS STEEL) SHALL BE HOT-DIP GALVANISED AFTER FABRICATION TO AS/NZS 4680, EXCEPT THRIE BEAM ANCHOR ASSEMBLY REFER TO RMS DRAWING No. B0509.
⊘ DENOTES JACK LOCATION FOR BEARING REPLACEMENT.
MINIMUM 300x300x20mm STEEL PLATES REQUIRED BETWEEN JACK AND CONCRETE SURFACE DURING BEARING REPLACEMENT.
JACK TO BE ENERPAC LPL 1602 (Ø220, 150t CAPACITY) OR EQUIVALENT.
MAXIMUM JACKING LOAD PER JACK AT ABUTMENTS:
1460kN ULS
1070kN SLS
FOR LOCATION AND PLACEMENT OF CAST-IN FERRULES FOR COVER PLATES, SEE SHEET No. 45.
THE COVER PLATES MAY BE USED AS A TEMPLATE, SEE SHEET No. 45 FOR FURTHER DETAILS.

NOT FOR CONSTRUCTION

ISSUE	DATE	REVISION	PREP	CHECK	AUTH
A	09-08-2021	ISSUED FOR TENDER	SM	LB	PB

LOCAL COUNCIL ROAD — SNOWY VALLEYS COUNCIL

REPLACEMENT OF TOWONG BRIDGE

ON TOWONG RD OVER MURRAY RIVER AT TOWONG

ABUTMENT A CONCRETE - SHEET A

Cardno®
Cardno (NSW/ACT) Pty Ltd | ABN 95 001 145 035
Level 9, The Forum, 203 Pacific Highway
St. Leonards, NSW 2065
Tel: 02 9496 7700 Fax: 02 9439 5170
Web: www.cardno.com.au

SOUTH WEST REGION

NSW GOVERNMENT Transport for NSW

	PREPARED	CHECKED
DESIGN	J.Guzman	L.Bai
DRAWING	A.Javier	S.Mathie
APPROVED/ DESIGN QA RECORDS	P.Boesch	

DIRECTOR

DRAWING SET No. DS2021/000055

BRIDGE No. B12447

ISSUE STATUS PRELIMINARY

ISSUE A | No OF SHEETS 57 | SHEET No 11

CAD No DS2017-002667-DC-BR-2001(05)

HE

ALF

THIS DRAWING IS CONFIDENTIAL AND SHALL ONLY BE USED FOR THE PURPOSE OF THE NOMINATED PROJECT

PRODUCED: 25 September 2020 AT 9:17:17 AM USER: Stuart Mathie
FILE PATH: W:\Projects\600\PY186100_PARKES BYPASS\Drawings\Build\05_XrfRMS-A1-SHT.dwg
PLOT DRIVER: NONE
PEN TABLE: ----

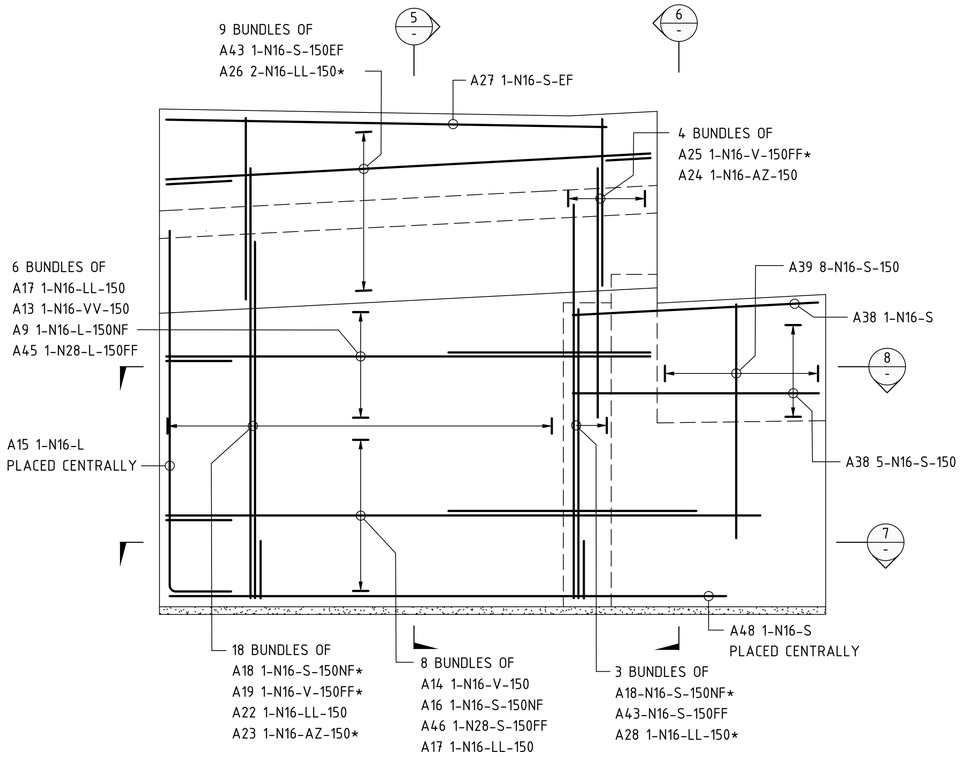

VIEW 3 / 14

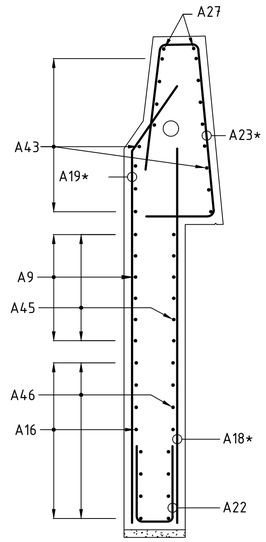

SECTION 5 / -

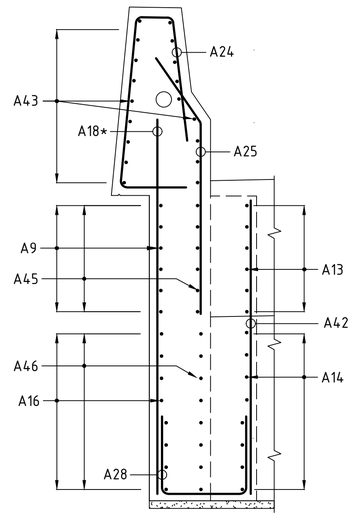

SECTION 6 / -

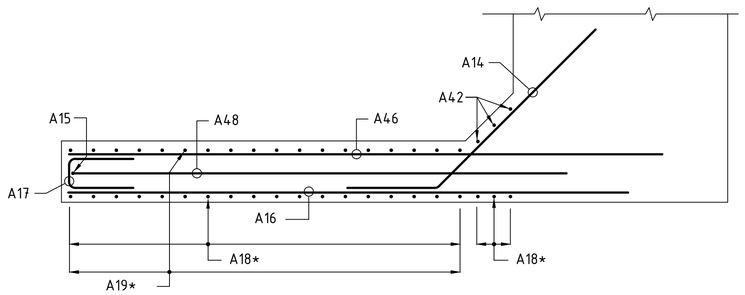

SECTION 7 / -

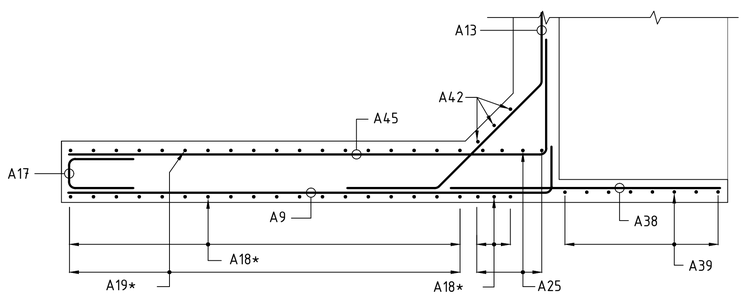

SECTION 8 / -

GENERAL NOTES

SCALE 0 500 1000mm (200) OR AS SHOWN

FOR GENERAL NOTES RELATING TO THIS SHEET, SEE SHEET No. 13.

NOT FOR CONSTRUCTION

ISSUE	DATE	REVISION	PREP	CHECK	AUTH
A	09-08-2021	ISSUED FOR TENDER	SM	LB	PB

LR7000 - TOWONG ROAD

SNOWY VALLEYS COUNCIL

REPLACEMENT OF TOWONG BRIDGE

ON TOWONG RD OVER MURRAY RIVER AT TOWONG

ABUTMENT A REINFORCEMENT - SHEET B

Cardno
Cardno (NSW/ACT) Pty Ltd | ABN 95 001 145 035
Level 9, The Forum, 203 Pacific Highway
St. Leonards, NSW 2065
Tel: 02 9496 7700 Fax: 02 9439 5170
Web: www.cardno.com.au

SOUTHWEST REGION

NSW GOVERNMENT Transport for NSW

	PREPARED	CHECKED
DESIGN	J.Guzman	L.Bai
DRAWING	D.Gibbs	S.Mathie

APPROVED/ DESIGN QA RECORDS P.Boesch

DIRECTOR

DRAWING SET No DS2021/000055

BRIDGE No BR12447

ISSUE STATUS: PRELIMINARY

ISSUE A | No OF SHEETS 57 | SHEET No 14

THIS DRAWING IS CONFIDENTIAL AND SHALL ONLY BE USED FOR THE PURPOSE OF THE NOMINATED PROJECT

DATE PLOTTED: 09/08/2021 11:03:43 AM
FILE PATH: BIM 360://80021046 Towong Bridge/80021046-MOD-BR-TOWONG BRIDGE_v2020.rvt
PLOT DRIVER: NONE
PEN TABLE: ----

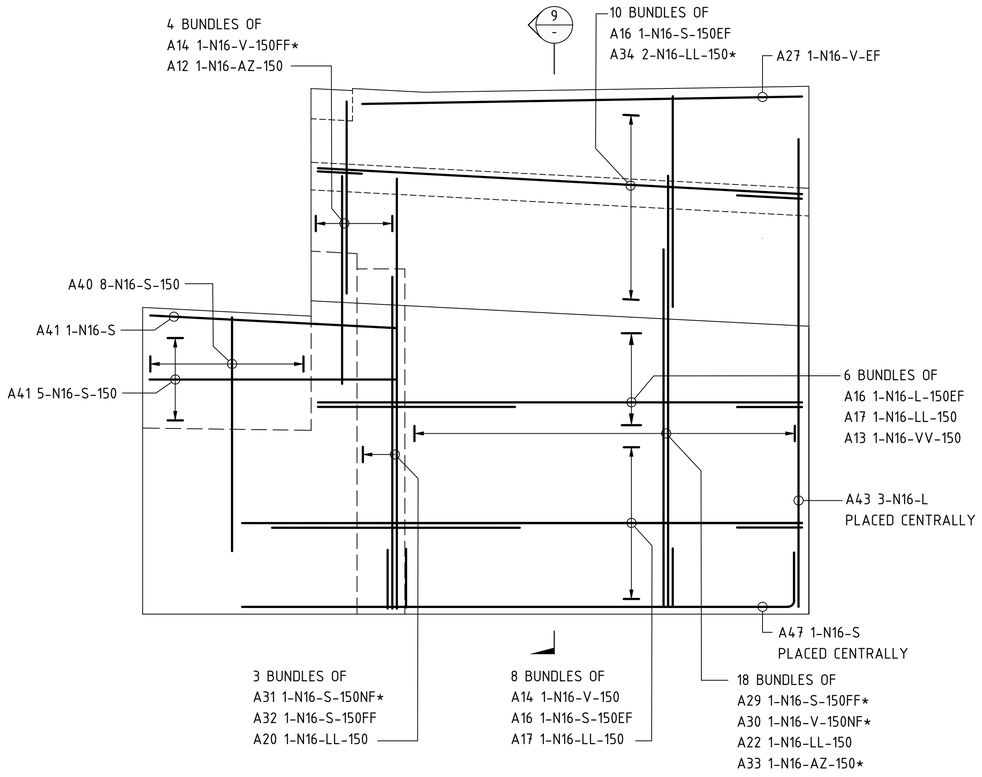

VIEW 4/13

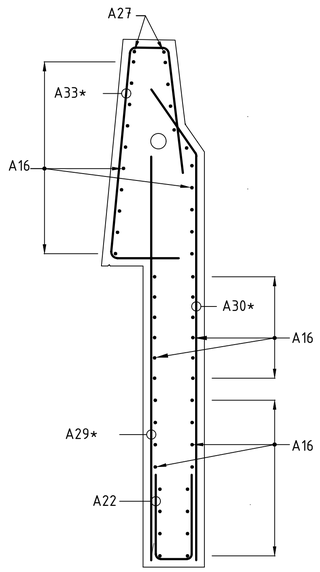

SECTION 9/-

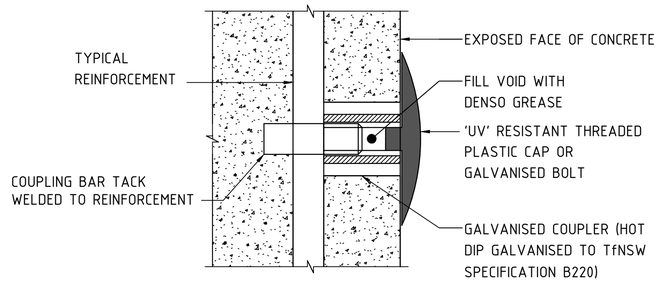

DETAIL A/13

0 50 100mm
20

CATHODIC PROTECTION CONNECTION POINT DETAIL

GENERAL NOTES

SCALE 0 500 1000mm / 200 OR AS SHOWN

FOR GENERAL NOTES RELATING TO THIS SHEET, SEE SHEET No. 13.

NOT FOR CONSTRUCTION

ISSUE	DATE	REVISION	PREP	CHECK	AUTH
A	09-08-2021	ISSUED FOR TENDER	SM	LB	PB

LR7000 - TOWONG ROAD — SNOWY VALLEYS COUNCIL

REPLACEMENT OF TOWONG BRIDGE

ON TOWONG RD OVER MURRAY RIVER AT TOWONG

ABUTMENT A REINFORCEMENT - SHEET C

Cardno
Cardno (NSW/ACT) Pty Ltd | ABN 95 001 145 035
Level 9, The Forum, 203 Pacific Highway
St. Leonards, NSW 2065
Tel: 02 9496 7700 Fax: 02 9439 5170
Web: www.cardno.com.au

NSW GOVERNMENT Transport for NSW — SOUTHWEST REGION

	PREPARED	CHECKED
DESIGN	J.Guzman	L.Bai
DRAWING	D.Gibbs	S.Mathie

APPROVED/ DESIGN QA RECORDS: P.Boesch — DIRECTOR

DRAWING SET No: DS2021/000055

BRIDGE No: BR12447

ISSUE STATUS: PRELIMINARY

ISSUE A | No OF SHEETS 57 | SHEET No 15

THIS DRAWING IS CONFIDENTIAL AND SHALL ONLY BE USED FOR THE PURPOSE OF THE NOMINATED PROJECT

DATE PLOTTED: 09/08/2021 11:03:43 AM
FILE PATH: BIM 360:/8302104 Towong Bridge/8302104-MOD-BR-TOWONG BRIDGE_v2020.rvt
PLOT DRIVER: NONE
PEN TABLE: ----

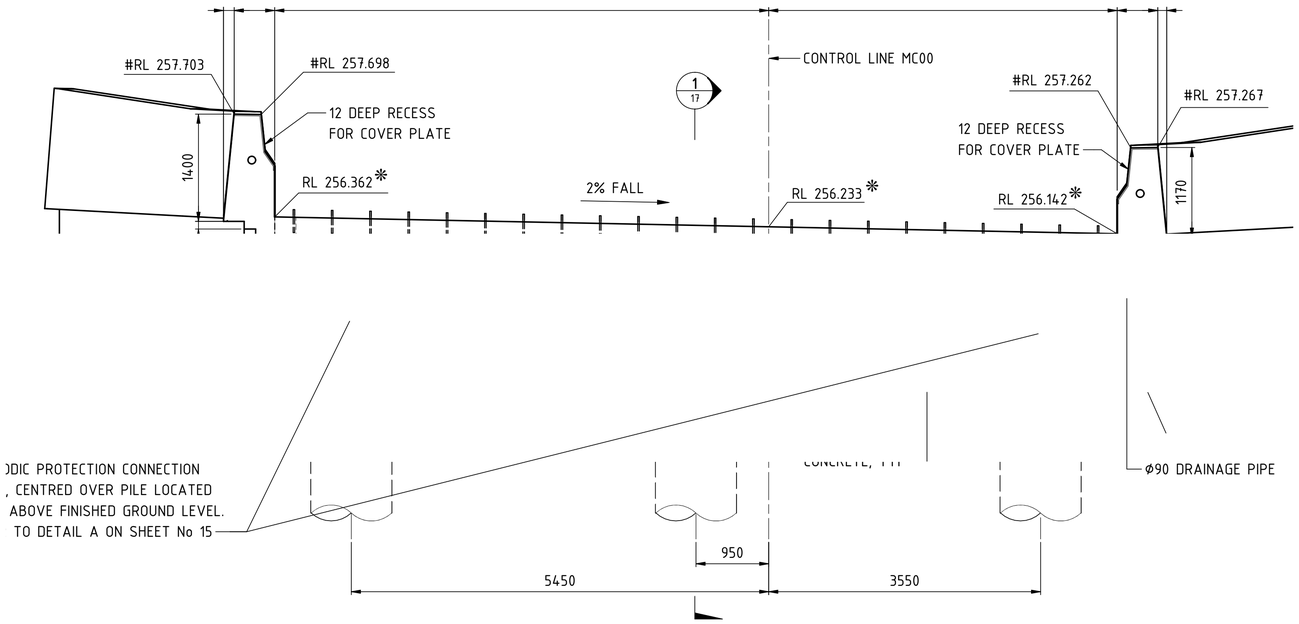

ELEVATION

# DENOTES RL GIVEN TO FINISHED LEVEL AND TOP OF COVER PLATE

* DENOTES RL ON FRONT OF HEADSTOCK AND CURTAIN WALL

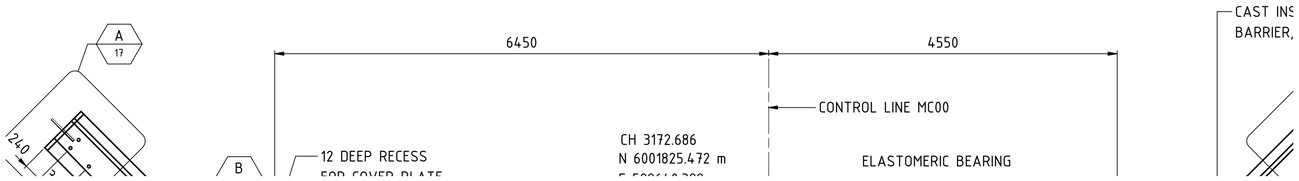

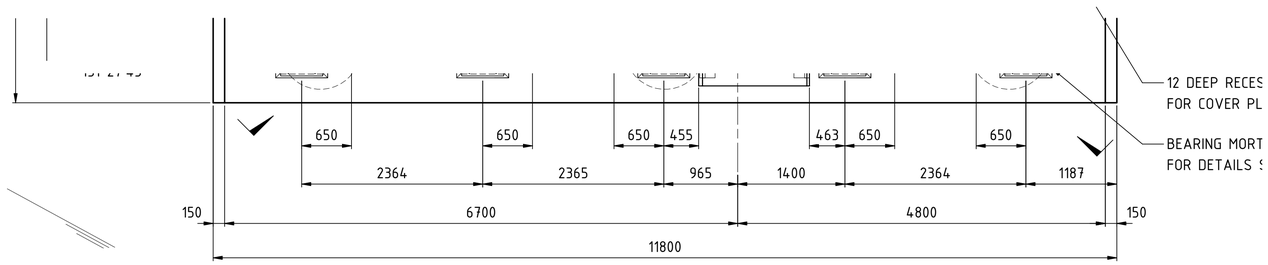

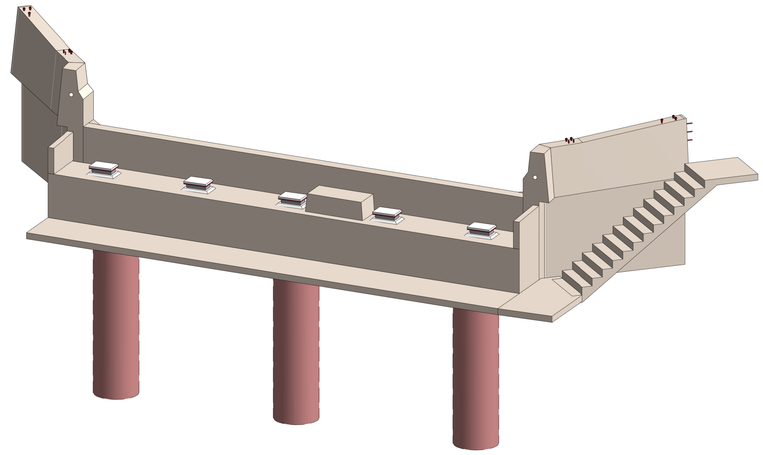

GENERAL NOTES

SCALE 0 600 1200 1800 2400 3000mm

OR AS SHOWN.

CONCRETE EXPOSURE CLASSIFICATION: B2.
MINIMUM 28 DAY COMPRESSIVE STRENGTH OF ALL CONCRETE SHALL BE 50MPa.
MINIMUM THICKNESS OF MASS CONCRETE SHALL BE 50mm WITH A MINIMUM 28 DAY COMPRESSIVE STRENGTH OF 20MPa UNLESS SPECIFIED OTHERWISE.
CONCRETE WORKS SHALL BE IN ACCORDANCE WITH TfNSW SPECIFICATION B80.
EDGES SHALL BE CHAMFERED 20x20 AND RE-ENTRANT ANGLES FILLETED 20x20 UNLESS SPECIFIED OTHERWISE.
NCF DENOTES NO CHAMFER OR FILLET.
STAINLESS STEEL DOWELS SHALL BE GRADE 304 IN ACCORDANCE WITH ASTM A276.
STEEL ITEMS (EXCLUDING STAINLESS STEEL) SHALL BE HOT-DIP GALVANISED AFTER FABRICATION TO AS/NZS 4680, EXCEPT THRIE BEAM ANCHOR ASSEMBLY REFER TO RMS DRAWING No. B0509.
⊘ NOTES JACK LOCATION FOR BEARING REPLACEMENT.
MINIMUM 300x300x20mm STEEL PLATES REQUIRED BETWEEN JACK AND CONCRETE SURFACE DURING BEARING REPLACEMENT.
JACK TO BE ENERPAC LPL 1602 (Ø220, 150t CAPACITY) OR EQUIVALENT.
MAXIMUM JACKING LOAD PER JACK AT ABUTMENTS:
1460kN ULS
1070kN SLS
FOR LOCATION AND PLACEMENT OF CAST-IN FERRULES FOR COVER PLATES, SEE SHEET No. 45.
THE COVER PLATES MAY BE USED AS A TEMPLATE, SEE SHEET No. 45 FOR FURTHER DETAILS.

NOT FOR CONSTRUCTION

ISSUE	DATE	REVISION	PREP	CHECK	AUTH
A	09-08-2021	ISSUED FOR TENDER	SM	LB	PB

LOCAL COUNCIL ROAD — SNOWY VALLEYS COUNCIL

REPLACEMENT OF TOWONG BRIDGE

ON TOWONG RD OVER MURRAY RIVER AT TOWONG

ABUTMENT B CONCRETE - SHEET A

Cardno
Cardno (NSW/ACT) Pty Ltd | ABN 95 001 145 035
Level 9, The Forum, 203 Pacific Highway
St. Leonards, NSW 2065
Tel: 02 9496 7700 Fax: 02 9439 5170
Web: www.cardno.com.au

SOUTH WEST REGION
NSW GOVERNMENT Transport for NSW

	PREPARED	CHECKED
DESIGN	J.Guzman	L.Bai
RAWING	A.Javier	S.Mathie

PPROVED/ ESIGN QA ECORDS P.Boesch
DIRECTOR

DRAWING SET No. DS2021/000055
BRIDGE No. B12447
ISSUE STATUS PRELIMINARY
ISSUE A | No OF SHEETS 57 | SHEET No 16

CAD No DS2017-002667-DC-BR-2001(05)

THIS DRAWING IS CONFIDENTIAL AND SHALL ONLY BE USED FOR THE PURPOSE OF THE NOMINATED PROJECT

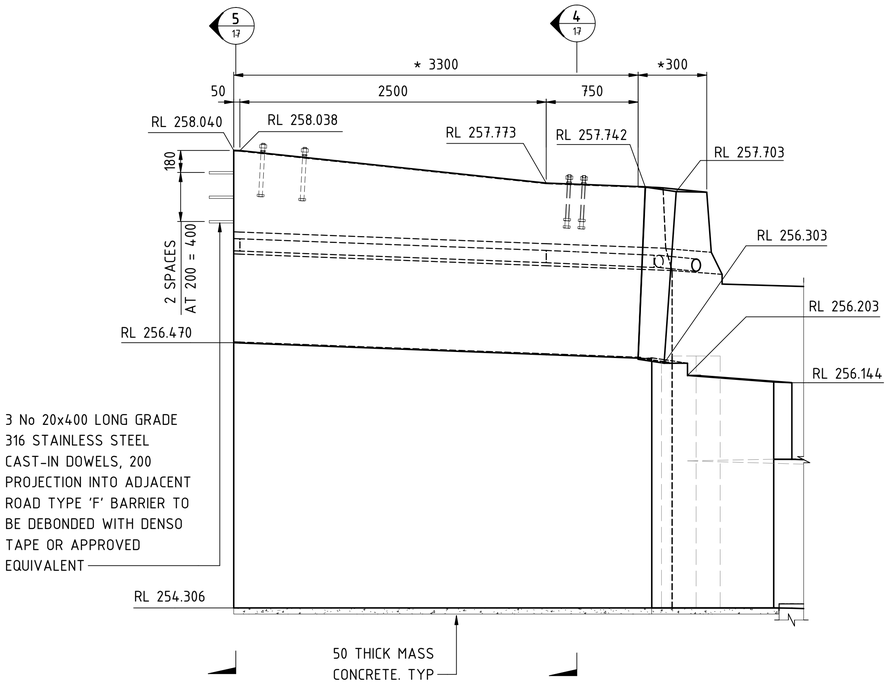

SECTION 2 / 16

* DENOTES DIMENSION AT OUTSIDE FACE OF WINGWALL

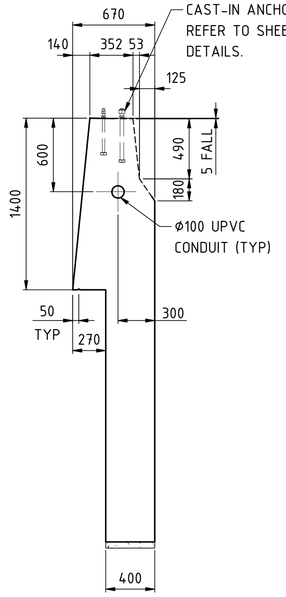

SECTION 4 / 17

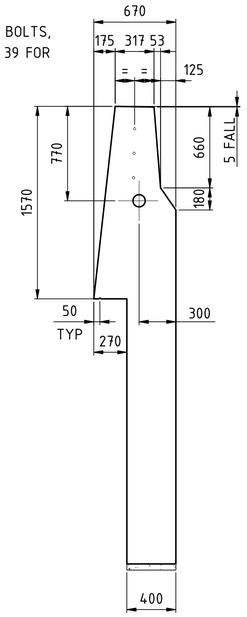

SECTION 5 / 17

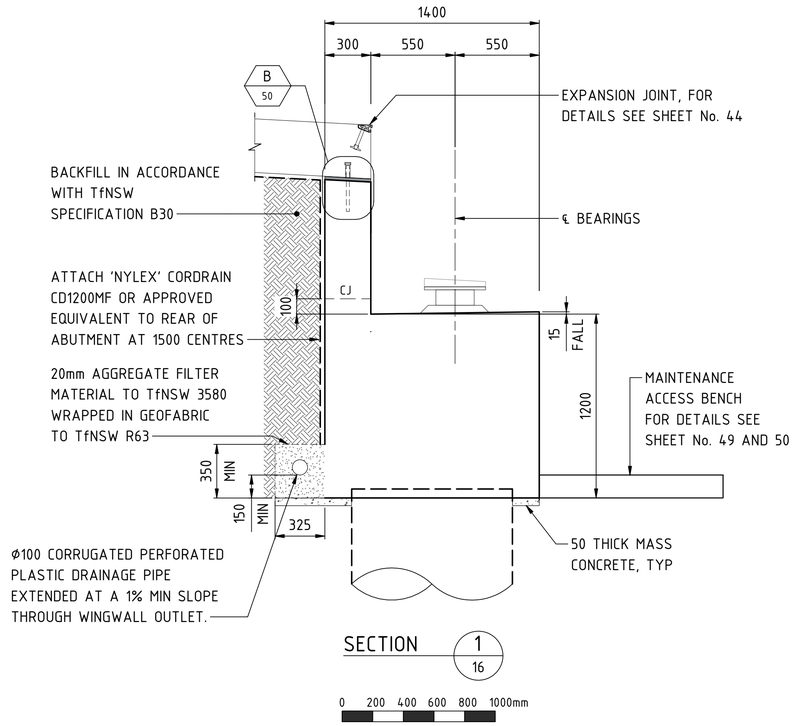

SECTION 1 / 16

0 200 400 600 800 1000mm

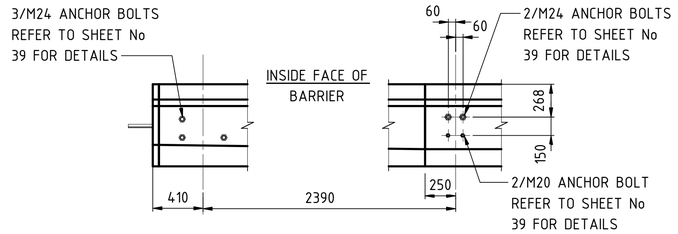

DETAIL A / 16 C / 16

DETAIL C OPPOSITE HAND

DETAIL B / 16 D / 16

DETAIL D OPPOSITE HAND

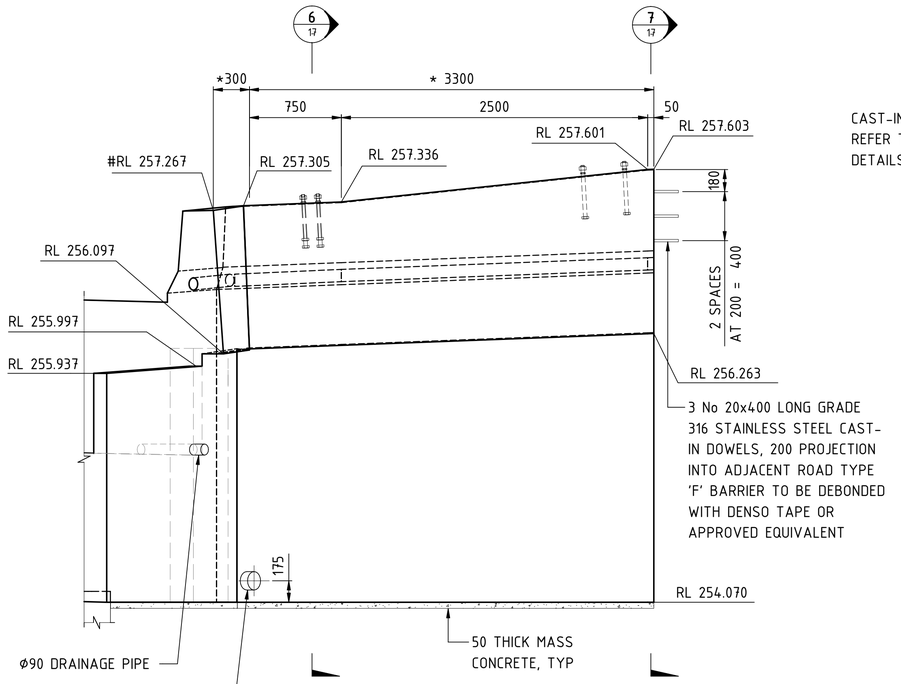

Ø150 FORMED HOLE FOR SUBSOIL DRAINAGE PIPE. PIPE TO BE PLACED AT TOP OF FORMED HOLE AND SELAED WITH GEOFABRIC TO ALLOW FOR SETTLEMENT OF FILL.

SECTION 3 / 16

* DENOTES DIMENSION AT OUTSIDE FACE OF WINGWALL

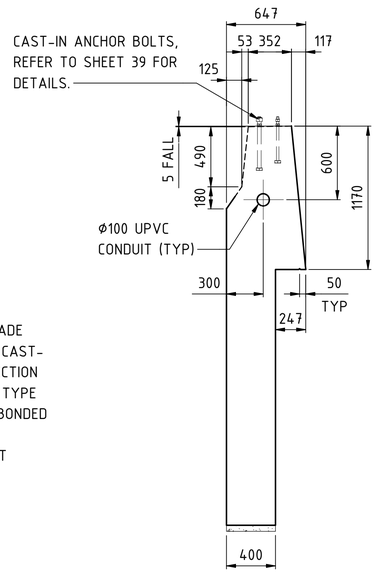

SECTION 6 / 17

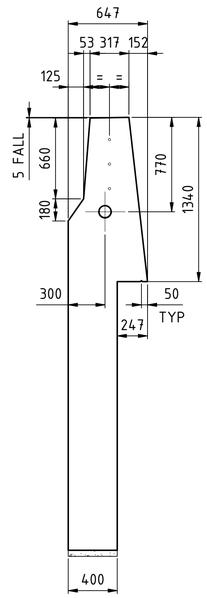

SECTION 7 / 17

GENERAL NOTES

SCALE 0 500 1000 1500 2000 2500mm OR AS SHOWN.

FOR GENERAL NOTES RELATING TO THIS SHEET, SEE SHEET No. 16.

NOT FOR CONSTRUCTION

ISSUE	DATE	REVISION	PREP	CHECK	AUTH
A	09-08-2021	ISSUED FOR TENDER	SM	LB	PB

LOCAL COUNCIL ROAD — SNOWY VALLEYS COUNCIL

REPLACEMENT OF TOWONG BRIDGE

ON TOWONG RD OVER MURRAY RIVER AT TOWONG

ABUTMENT B CONCRETE - SHEET B

Cardno
Cardno (NSW/ACT) Pty Ltd | ABN 95 001 145 035
Level 9, The Forum, 203 Pacific Highway
St. Leonards, NSW 2065
Tel: 02 9496 7700 Fax: 02 9439 5170
Web: www.cardno.com.au

SOUTH WEST REGION
NSW GOVERNMENT Transport for NSW

	PREPARED	CHECKED
DESIGN	J.Guzman	L.Bai
DRAWING	A.Javier	S.Mathie

APPROVED/ DESIGN QA RECORDS: P.Boesch — DIRECTOR

DRAWING SET No. DS2021/000055

BRIDGE No. B12447

ISSUE STATUS PRELIMINARY

ISSUE A | No OF SHEETS 57 | SHEET No 17

CAD No DS2017-002667-DC-BR-2001(05)

THIS DRAWING IS CONFIDENTIAL AND SHALL ONLY BE USED FOR THE PURPOSE OF THE NOMINATED PROJECT

PRODUCED: 25 September 2020 AT 9:17:17 AM USER: Stuart Mathie
FILE PATH: V:\Projects\80\0FF118100_PARKES BYPASS\Drawings\Build\05_XrfRMS-A1-SHT.dwg
PLOT DRIVER: NONE
PEN TABLE: ----

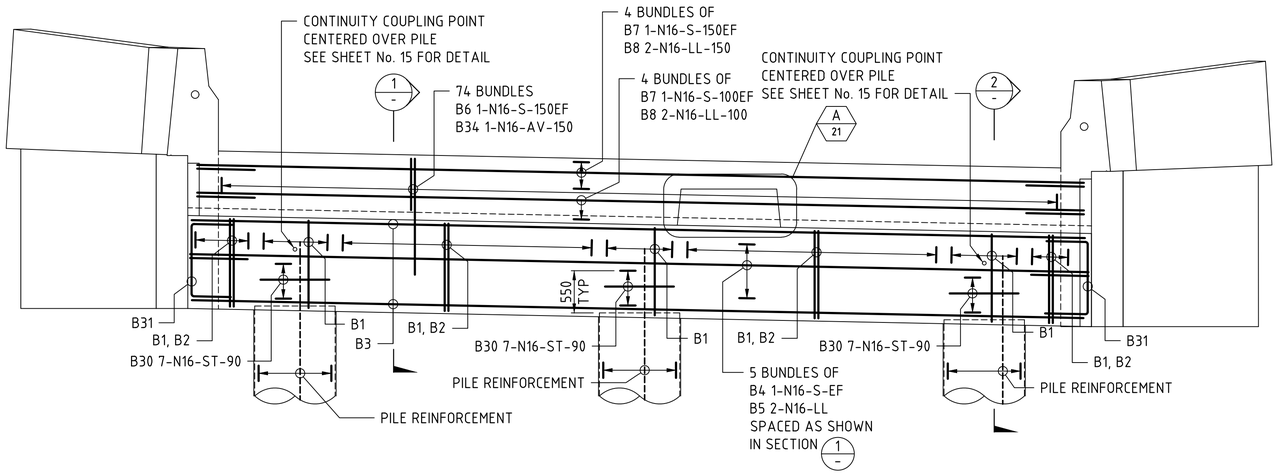

ELEVATION

WINGWALL REINFORCEMENT NOT SHOWN FOR CLARITY

0 1000 2000mm
500

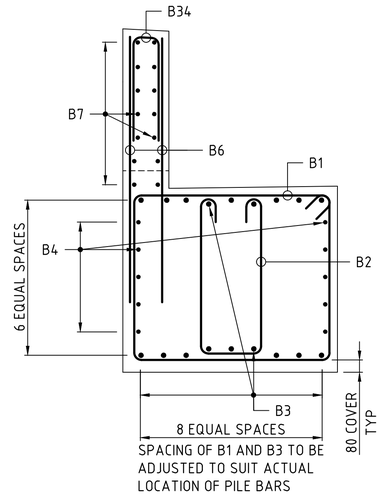

SECTION 1 / -

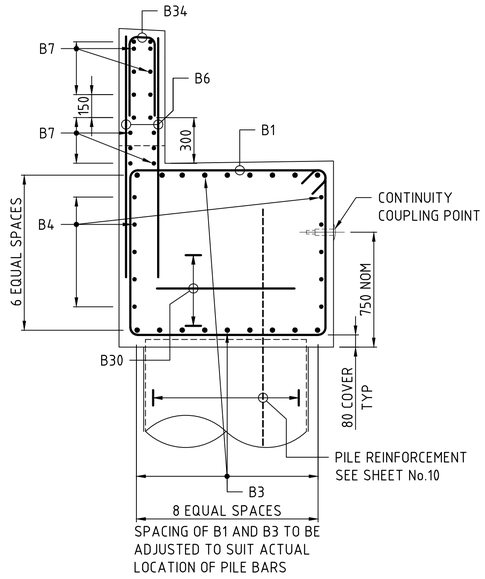

SECTION 2 / -

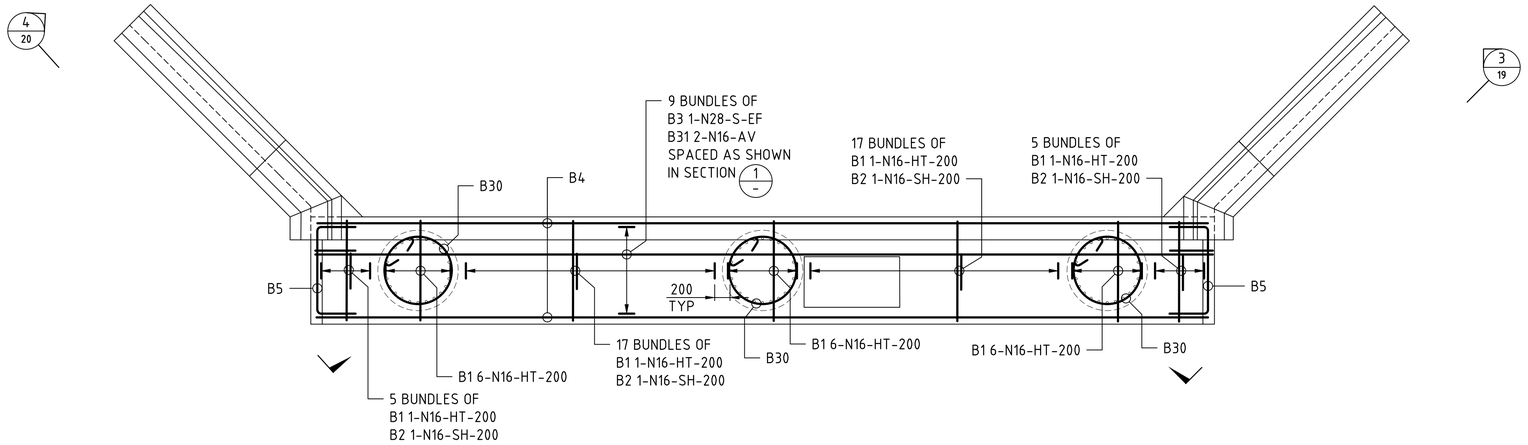

PLAN

WINGWALL AND CURTAIN WALL REINFORCEMENT NOT SHOWN FOR CLARITY

0 1000 2000mm
500

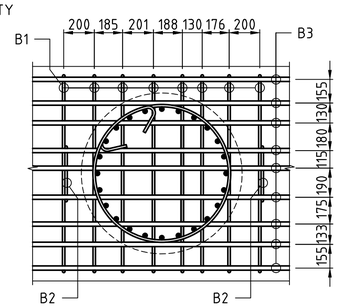

REINFORCEMENT AT ABUTMENT PILE INTERSECTION

ABUTMENT BAR SPACING TO BE ADJUSTED TO SUIT ACTUAL LOCATION OF PILE BARS

CATHODIC PROTECTION

ALL OF THE REINFORCEMENT IN THE PILES AND ABUTMENT SILL BEAMS SHALL BE ELECTRICALLY CONTINUOUS TO ALLOW FOR THE FUTURE PROVISION OF CATHODIC PROTECTION.
ELECTRICAL CONTINUITY MUST BE DEMONSTRATED BY TESTING IN ACCORDANCE WITH AS 2832.5.
WELDING REINFORCEMENT SHALL BE IN ACCORDANCE WITH TfNSW SPECIFICATION D&C B203.
ELECTRICAL CONNECTIVITY OF REINFORCEMENT SHALL BE DEMONSTRATED IN ACCORDANCE WITH AS 2832.5, WITH REINFORCEMENT HAVING A STABLE RESISTANCE OF LESS THAN 2 OHMS USING TACK WELDING, MECHANICAL MEANS OR APPROVED EQUIVALENT.
A MINIMUM OF TWO CONNECTION POINTS ARE REQUIRED PER CONTINUOUS ZONE.

GENERAL NOTES

SCALE 0 500 1000mm / 200 OR AS SHOWN.

REQUIRED COVER TO REINFORCEMENT NEAREST TO THE CONCRETE SURFACE MUST BE 50mm UNLESS SPECIFIED OTHERWISE.
WHEN CURING COMPOUNDS ARE USED, THE COVER SHOULD BE INCREASED BY 5mm FOR CLASSIFICATIONS A AND B1, AND 10mm FOR OTHER CLASSIFICATIONS.
UNLESS SHOWN OTHERWISE ON THE DRAWINGS LAPS OF ADJACENT BARS MUST BE STAGGERED (OFFSET) BY NO LESS THAN THE LENGTH OF LAP.
UNLESS OTHERWISE SPECIFIED, THE MINIMUM DEVELOPMENT LENGTHS AND LENGTHS OF LAPS MUST BE AS FOLLOWS:

BAR SIZE:	N12	N16	N20	N24	N28	N32	N36
a) LAP LENGTH - HORIZONTAL BARS WITH > 300mm OF CONCRETE CAST BELOW THE BAR	500	700	1000	1300	1650	2000	2400
b) LAP LENGTH - OTHER BARS	400	550	800	1050	1300	1550	1850
c) DEVELOPMENT LENGTH	400	550	650	850	1050	1250	1500

CLEAR DISTANCE BETWEEN LAPPED BARS SHALL NOT EXCEED 3X BAR DIAMETER.
WHERE THE BAR SIZES AT A LAP VARY, THE LAP LENGTH SHALL BE BASED ON REINFORCEMENT MAY BE DISPLACED SLIGHTLY WHERE NECESSARY TO CLEAR PILE REINFORCEMENT, VOIDS, DOWELS, STUDS AND GENERAL FITMENTS.
* DENOTES VARIABLE LENGTH BAR.
ES DENOTES EQUAL SPACINGS.

NOT FOR CONSTRUCTION

ISSUE	DATE	REVISION	PREP	CHECK	AUTH
A	09-08-2021	ISSUED FOR TENDER	SM	LB	PB

LR7000 - TOWONG ROAD — SNOWY VALLEYS COUNCIL

REPLACEMENT OF TOWONG BRIDGE

ON TOWONG RD OVER MURRAY RIVER AT TOWONG

ABUTMENT B REINFORCEMENT - SHEET A

Cardno
Cardno (NSW/ACT) Pty Ltd | ABN 95 001 145 035
Level 9, The Forum, 203 Pacific Highway
St. Leonards, NSW 2065
Tel: 02 9496 7700 Fax: 02 9439 5170
Web: www.cardno.com.au

NSW GOVERNMENT Transport for NSW — SOUTHWEST REGION

	PREPARED	CHECKED
DESIGN	J.Guzman	L.Bai
DRAWING	R.Paras	S.Mathie

APPROVED/ DESIGN QA RECORDS: P.Boesch — DIRECTOR

DRAWING SET No: DS2021/000055
BRIDGE No: BR12447
ISSUE STATUS: PRELIMINARY
ISSUE A | No OF SHEETS 57 | SHEET No 18

THIS DRAWING IS CONFIDENTIAL AND SHALL ONLY BE USED FOR THE PURPOSE OF THE NOMINATED PROJECT

DATE PLOTTED: 09/08/2021 11:04:16 AM
FILE PATH: BIM 360:/80021046 Towong Bridge/80021046-MOD-BR-TOWONG BRIDGE_v2020.rvt
PLOT DRIVER: NONE
PEN TABLE: ----

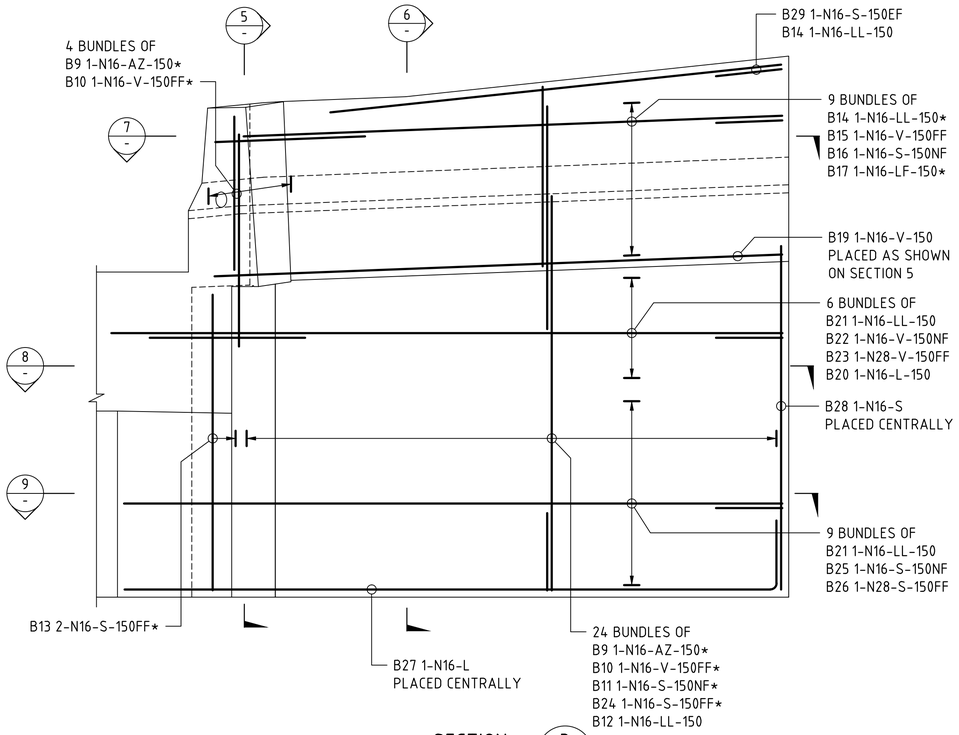

SECTION 3 / 18

ABUTMENT REINFORCEMENT NOT SHOWN FOR CLARITY

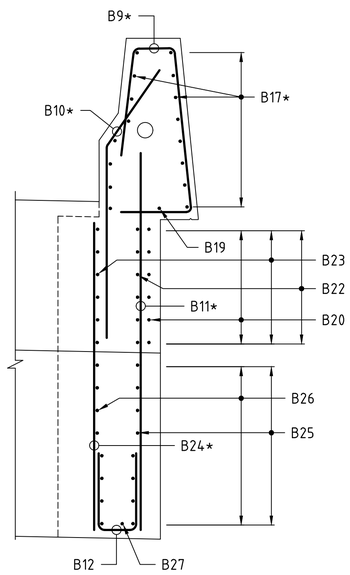

SECTION 5 / -

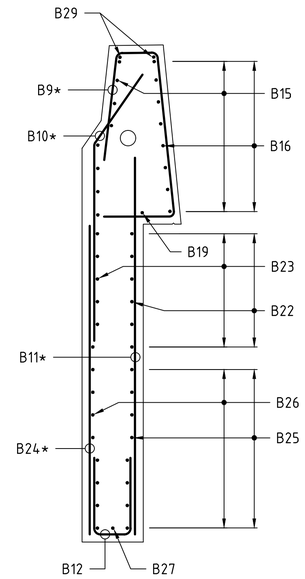

SECTION 6 / -

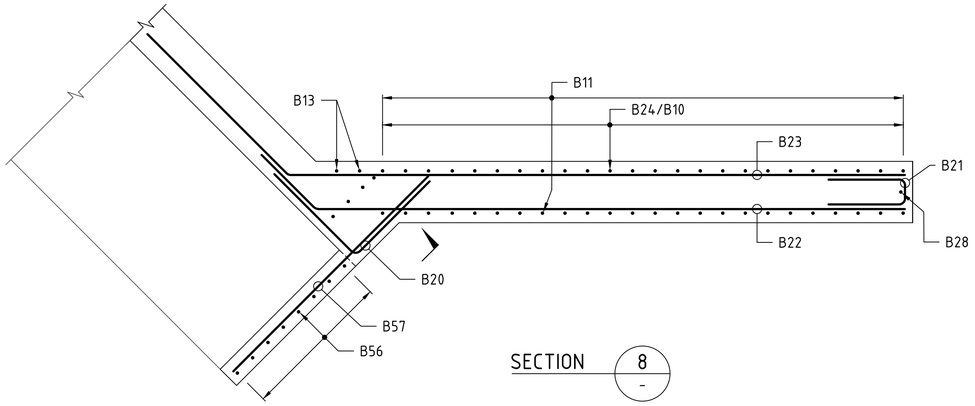

SECTION 8 / -

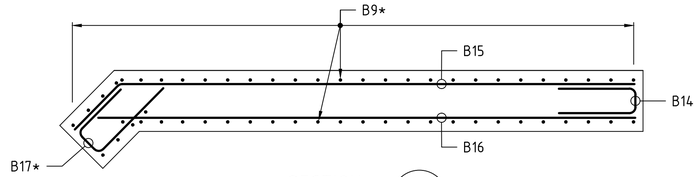

SECTION 7 / -

16 / -

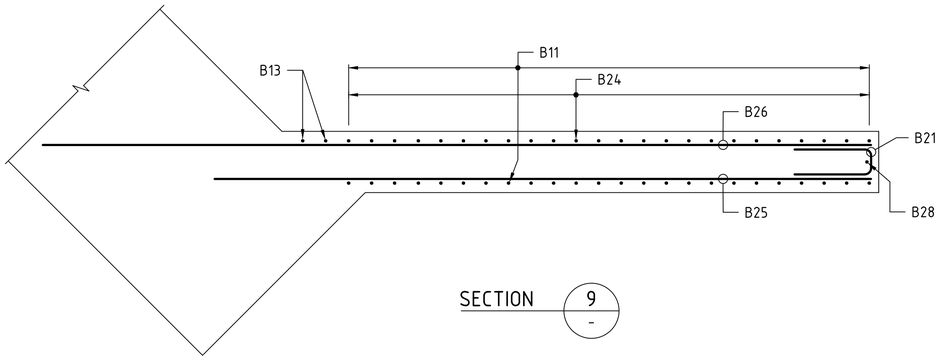

SECTION 9 / -

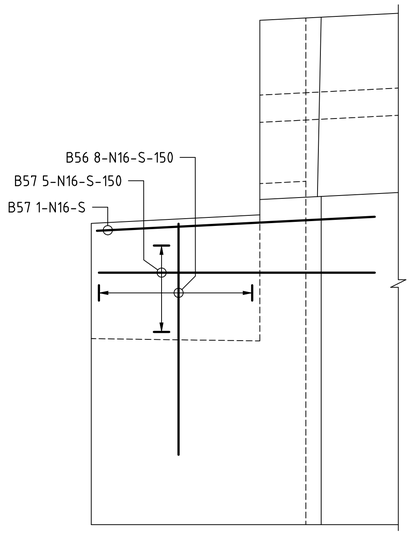

SECTION 16 / -

GENERAL NOTES

SCALE 0 500 1000mm (200) OR AS SHOWN.

FOR GENERAL NOTES RELATING TO THIS SHEET, SEE SHEET No. 18.

NOT FOR CONSTRUCTION

ISSUE	DATE	REVISION	PREP	CHECK	AUTH
A	09-08-2021	ISSUED FOR TENDER	SM	LB	PB

LR7000 - TOWONG ROAD — SNOWY VALLEYS COUNCIL

REPLACEMENT OF TOWONG BRIDGE

ON TOWONG RD OVER MURRAY RIVER AT TOWONG

ABUTMENT B REINFORCEMENT - SHEET B

Cardno
Cardno (NSW/ACT) Pty Ltd | ABN 95 001 145 035
Level 9, The Forum, 203 Pacific Highway
St. Leonards, NSW 2065
Tel: 02 9496 7700 Fax: 02 9439 5170
Web: www.cardno.com.au

NSW GOVERNMENT — Transport for NSW — SOUTHWEST REGION

	PREPARED	CHECKED
DESIGN	J.Guzman	L.Bai
DRAWING	R.Paras	S.Mathie

APPROVED/ DESIGN QA RECORDS: P.Boesch — DIRECTOR

DRAWING SET No: DS2021/000055

BRIDGE No: BR12447

ISSUE STATUS: PRELIMINARY

ISSUE A — No OF SHEETS 57 — SHEET No 19

THIS DRAWING IS CONFIDENTIAL AND SHALL ONLY BE USED FOR THE PURPOSE OF THE NOMINATED PROJECT

DATE PLOTTED: 09/08/2021 1:22:32 PM
FILE PATH: BIM 360:\80021046 Towong Bridge\80021046-MOD-BR-TOWONG BRIDGE_v2020.rvt
PLOT DRIVER: NONE
PEN TABLE: ----

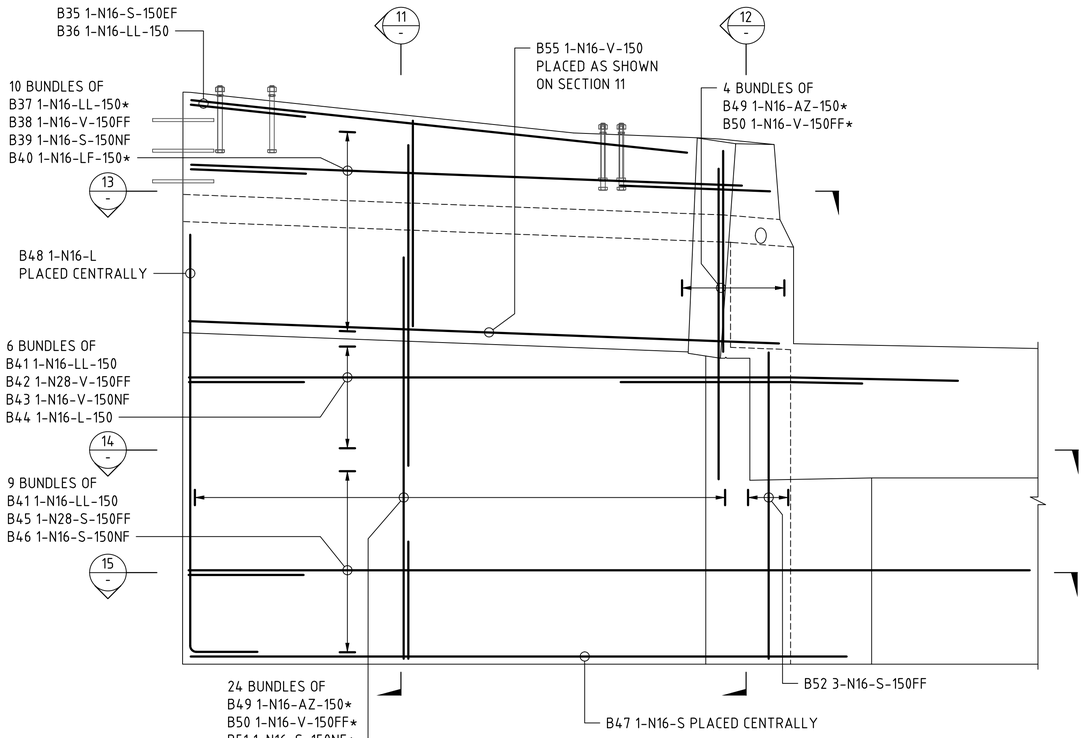

SECTION 4 / 18

ABUTMENT REINFORCEMENT NOT SHOWN FOR CLARITY

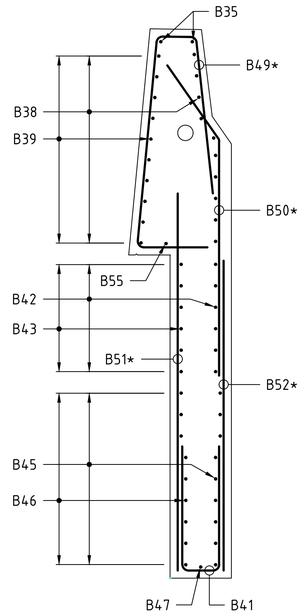

SECTION 11 / -

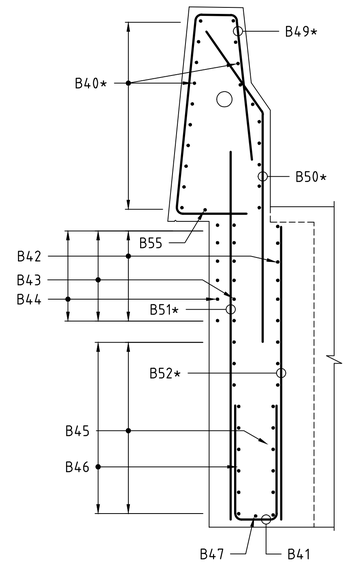

SECTION 12 / -

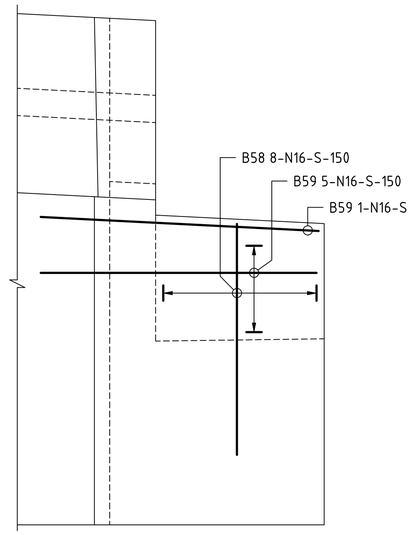

SECTION 17 / -

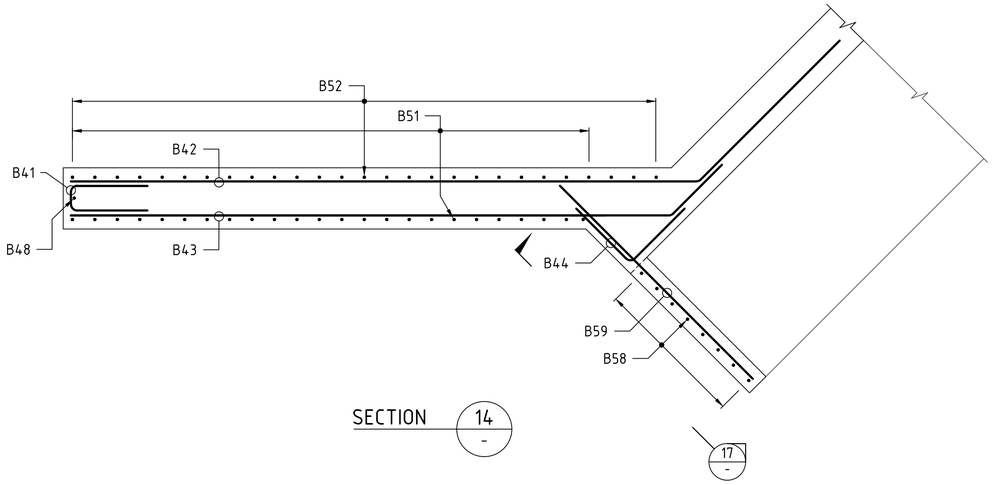

SECTION 14 / -

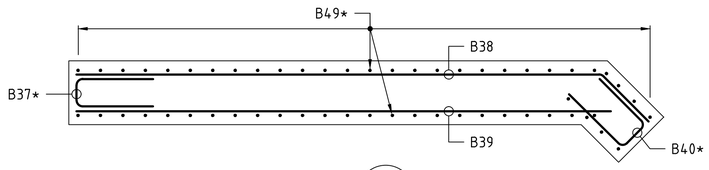

SECTION 13 / -

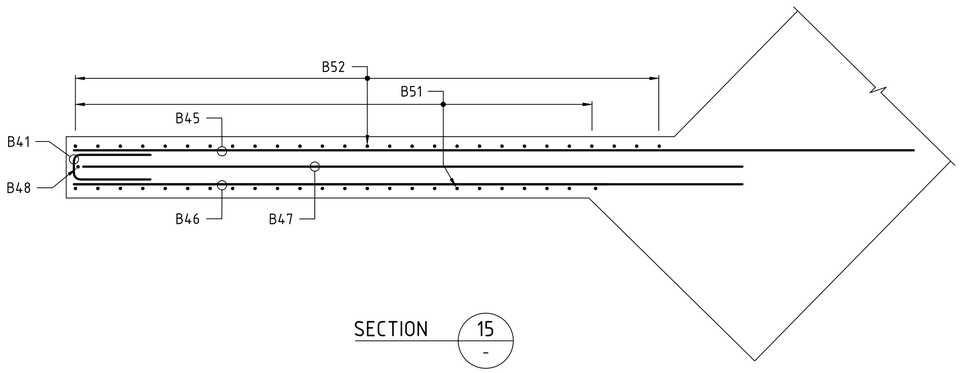

SECTION 15 / -

GENERAL NOTES

SCALE 0 200 500 1000mm OR AS SHOWN.

FOR GENERAL NOTES RELATING TO THIS SHEET, SEE SHEET No. 18.

NOT FOR CONSTRUCTION

ISSUE	DATE	REVISION	PREP	CHECK	AUTH
A	09-08-2021	ISSUED FOR TENDER	SM	LB	PB

LR7000 - TOWONG ROAD — SNOWY VALLEYS COUNCIL

REPLACEMENT OF TOWONG BRIDGE

ON TOWONG RD OVER MURRAY RIVER AT TOWONG

ABUTMENT B REINFORCEMENT - SHEET C

Cardno
Cardno (NSW/ACT) Pty Ltd | ABN 95 001 145 035
Level 9, The Forum, 203 Pacific Highway
St. Leonards, NSW 2065
Tel: 02 9496 7700 Fax: 02 9439 5170
Web: www.cardno.com.au

NSW GOVERNMENT Transport for NSW — SOUTHWEST REGION

	PREPARED	CHECKED
DESIGN	J.Guzman	L.Bai
DRAWING	J.Keogh	S.Mathie

APPROVED/ DESIGN QA RECORDS: P.Boesch — DIRECTOR

DRAWING SET No: DS2021/000055

BRIDGE No: BR12447

ISSUE STATUS: PRELIMINARY

ISSUE A | No OF SHEETS 57 | SHEET No 20

THIS DRAWING IS CONFIDENTIAL AND SHALL ONLY BE USED FOR THE PURPOSE OF THE NOMINATED PROJECT

DATE PLOTTED: 09/08/2021 10:31:01 AM
FILE PATH: BM:360/80021046 Towong Bridge/80021046-MOD-BR-TOWONG BRIDGE_v2020.rvt
PLOT DRIVER: NONE
PEN TABLE: ----

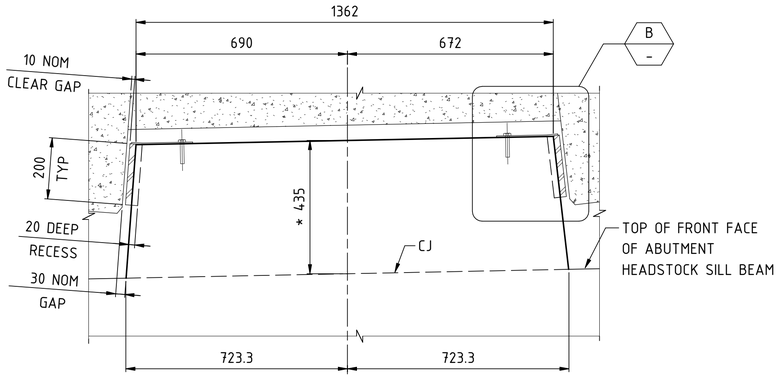

SECTION 1 -

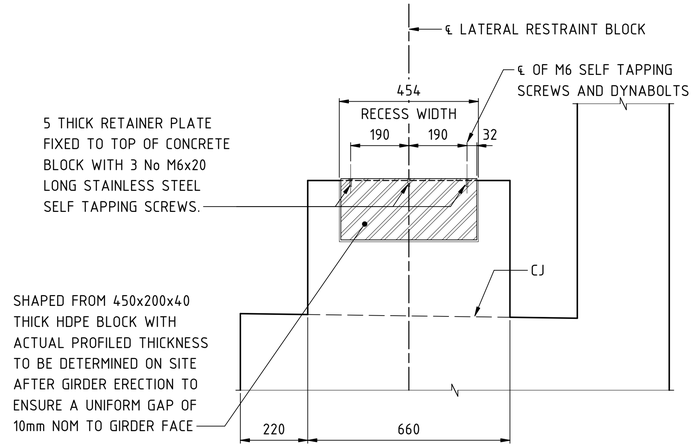

SECTION 2 -

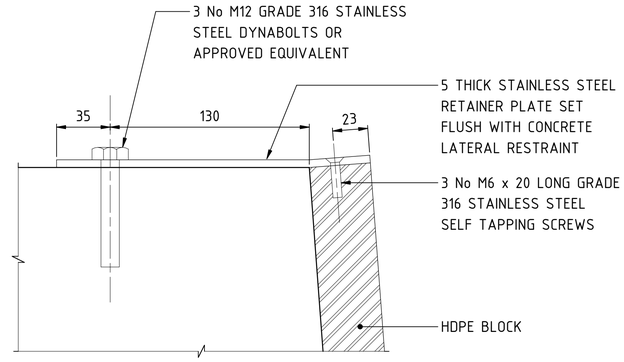

DETAIL B -

0 20 40 60 80 100mm

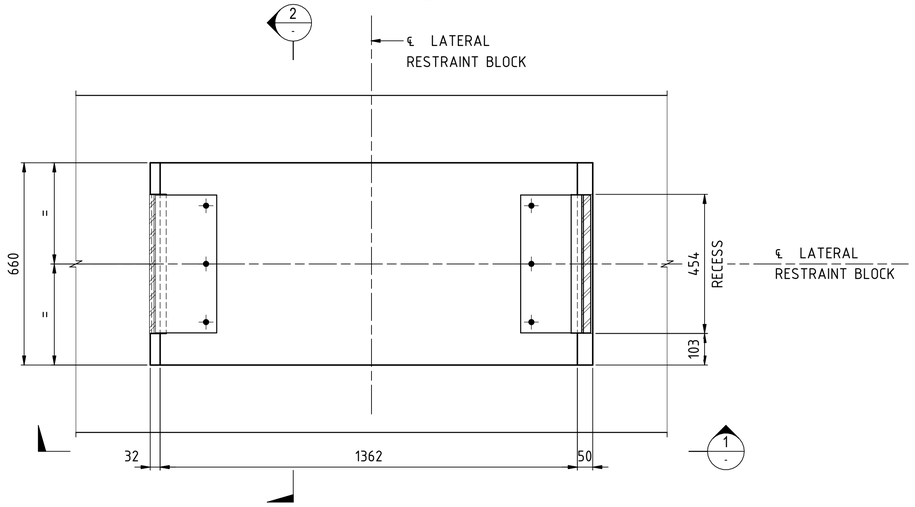

PLAN

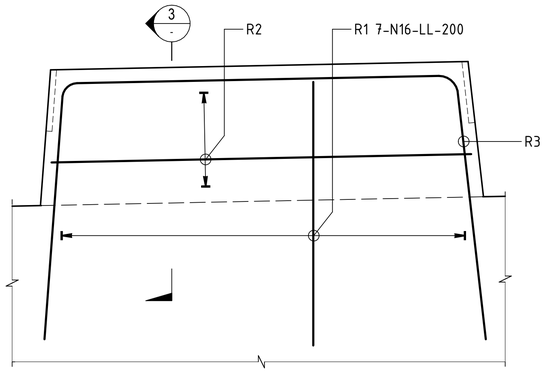

DETAIL A 13 / A 18

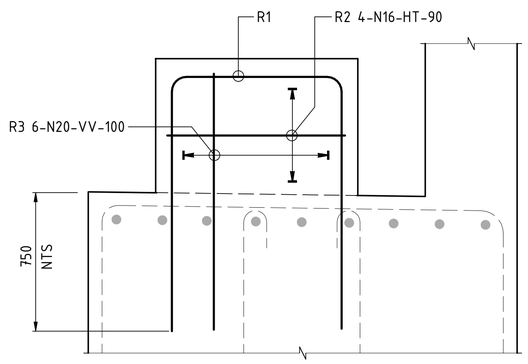

SECTION 3 -

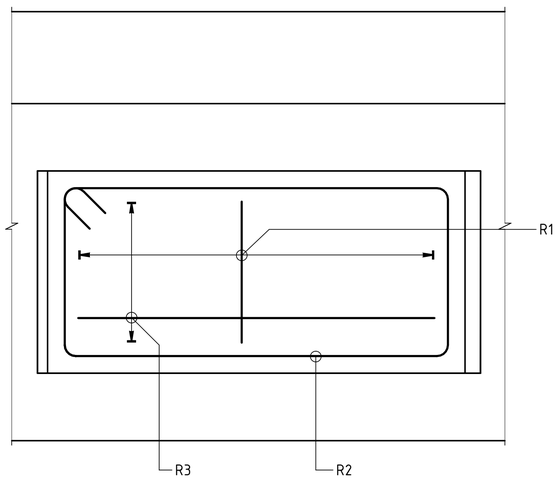

REINFORCEMENT PLAN

GENERAL NOTES

SCALE 0 200 400 600 800 1000mm OR AS SHOWN

LATERAL RESTRAINT BLOCK MUST BE CAST AFTER GIRDERS HAVE BEEN ERECTED, ALIGNED AND FIXED IN THEIR FINAL POSITION.
HDPE RESTRAINT BLOCKS SHALL BE HERCULES HDPE BLOCKS OR APPROVED EQUIVALENT.
HDPE BLOCK THICKNESS SHALL BE ADJUSTED TO ACHIEVE SPECIFIED GAP.
STAINLESS STEEL RETAINER PLATE GRADE 316 TO ASTM A240M. FASTENER SHALL CONFORM TO THE REQUIREMENTS OF TfNSW QA SPECIFICATION B240.
FASTENER SHALL CONFORM GRADE 316 (A4) TO ISO 3506.
* DENOTES NOMINAL DIMENSION WHICH MAY BE ADJUSTED TO SUIT GIRDER TYPE AND BEARING HEIGHT USED.
FOR OTHER GENERAL NOTES RELATING TO THIS SHEET, SEE SHEET No. 11 AND 16.

NOT FOR CONSTRUCTION

ISSUE	DATE	REVISION	PREP	CHECK	AUTH
A	09-08-2021	ISSUED FOR TENDER	SM	LB	PB

LOCAL COUNCIL ROAD — SNOWY VALLEYS COUNCIL

REPLACEMENT OF TOWONG BRIDGE

ON TOWONG RD OVER MURRAY RIVER AT TOWONG

ABUTMENT RESTRAINT BLOCK DETAILS

Cardno®
Level 3, The Forum, 203 Pacific Highway
St. Leonards, NSW 2065
Tel: 02 9496 7700. Fax: 02 9439 5170
Web: www.cardno.com.au

NSW GOVERNMENT Transport for NSW — SOUTH WEST REGION

	PREPARED	CHECKED
DESIGN	J.Guzman	L.Bai
DRAWING	A.Javier	S.Mathie
APPROVED/ DESIGN QA RECORDS	P.Boesch	
	DIRECTOR	

DRAWING SET No. DS2021/000055
BRIDGE No. B12447
ISSUE STATUS PRELIMINARY
ISSUE A | No OF SHEETS 57 | SHEET No 21

CAD No DS2017-002667-DC-BR-2001(05)

THIS DRAWING IS CONFIDENTIAL AND SHALL ONLY BE USED FOR THE PURPOSE OF THE NOMINATED PROJECT

PRODUCED: 25 September 2020 AT 9:17:17 AM USER: Stuart Mathie
FILE: J:\2017\Projects\800\PY18100_PARKES BYPASS\Drawings\Build\05_Xrf\RMS-A1-SHT.dwg
PLOT DRIVER: NONE
PEN TABLE: ----

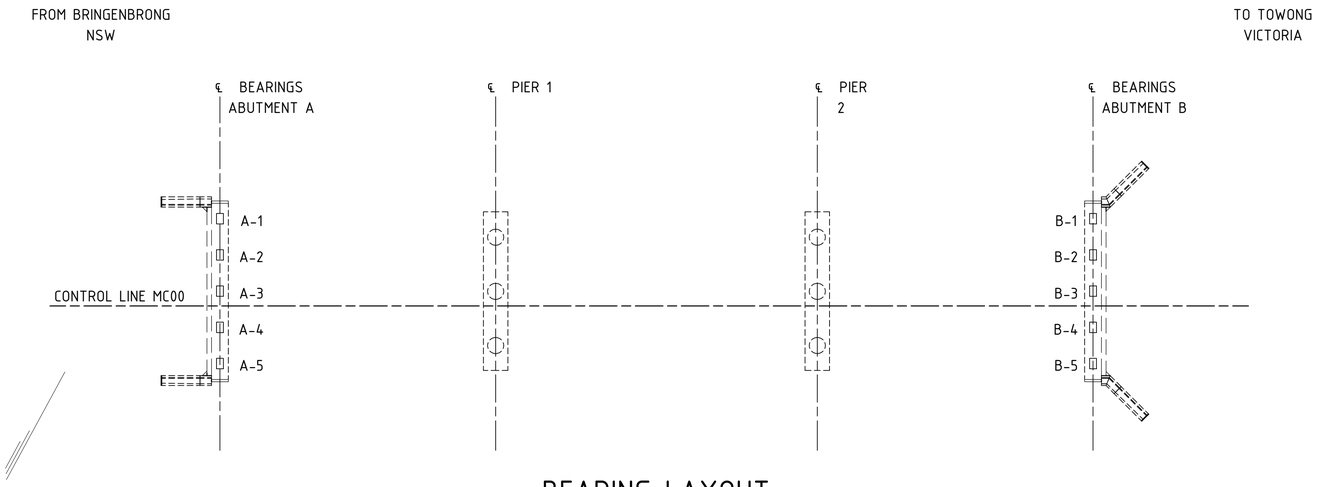

BEARING LAYOUT

TABLE 1 - BEARING LEVELS

LOCATION	BEARING NO	RL 'X'
ABUT A	A-1	252.583
	A-2	252.536
	A-3	252.489
	A-4	252.441
	A-5	252.394
ABUT B	B-1	255.641
	B-2	255.594
	B-3	255.547
	B-4	255.500
	B-5	255.452

GENERAL NOTES

SCALE 0 4 8 12 16 20m

MINIMUM 28 DAY COMPRESSIVE STRENGTH OF EPOXY MORTAR AND CEMENT MORTAR MUST BE 40MPa PRIOR TO BEARING INSTALLATION.
THE MIX RATIO OF EPOXY AND SAND AND THE TYPE OF SAND FOR THE EPOXY MORTAR BLOCK MUST IN ACCORDANCE WITH EPOXY MANUFACTURER'S SPECIFICATION.
EPOXY MORTAR BLOCKS MUST BE CONSTRUCTED NOT MORE THAN 2 WEEKS PRIOR TO THE ERECTION OF THE GIRDER.
THE SIDES OF THE EPOXY MORTAR PAD SHALL BE FORMED VERTICAL AND FINISHED SMOOTH. EPOXY MORTAR BLOCKS TO BE TAGGED APPROPRIATELY.
THE MINIMUM THICKNESS OF EPOXY MORTAR BLOCKS TO BE 10mm.
THE MINIMUM THICKNESS OF CEMENT MORTAR PAD TO BE 20mm.
BEARING LEVELS HAVE BEEN CALCULATED BASED ON A PREDICTED 60 DAY GIRDER.
HOG OF 46mm WITH A DEFLECTION OF 15mm FOR SPANS 1 AND 3.
HOG OF 54mm WITH A DEFLECTION OF 23mm FOR SPANS 2.
UNDER WEIGHT OF WET CONCRETE IE: RESIDUAL HOG OF 31mm.
THE HOG SHALL BE MEASURED NO MORE THAN 2 WEEKS PRIOR TO ERECTION OF GIRDERS.
STEEL PLATE MUST CONFORM TO AS/NZS 3678-250.
ALL FASTENERS SHALL CONFORM TO THE REQUIREMENTS OF TfNSW QA SPECIFICATION B240.
SECURING BOLTS SHALL BE PRODUCT GRADE C IN ACCORDANCE WITH AS/NZS 1111.1.
HEXAGON HEAD SCREWS SHALL BE PRODUCT GRADE C IN ACCORDANCE WITH AS/NZS 1111.2.
THE BOLTING CATEGORY FOR PRODUCT GRADE C BOLTS AND SCREWS SHALL BE 4.6/S IN ACCORDANCE WITH AS 5100.6.
TAPERED WASHERS MUST CONFORM WITH MATERIAL PROPERTIES AS SPECIFIED IN AS/NZS 1237.1.
ATTACHMENT PLATES WITH BOLTS AND WASHERS MUST BE HOT-DIP GALVANISED AFTER FABRICATION.
EXPOSED EDGES OF STEEL PLATES MUST BE ROUNDED TO A RADIUS OF 1.5mm PRIOR TO GALVANISING.

BEARING INSTALLATION SEQUENCE

1. PRIOR TO CONSTRUCTING CEMENT PADS AND EPOXY MORTAR BLOCKS, SUBMIT DOCUMENTATION FOR HOLD POINT RELEASE IN ACCORDANCE WITH TfNSW SPECIFICATION B284.
2. MEASURE THE GIRDER HOGS NOT MORE THAN 2 WEEKS PRIOR TO THE ERECTION OF THE GIRDER.
3. CONSTRUCT CEMENT MORTAR PADS.
4. CAST EPOXY MORTAR BLOCKS DIRECTLY ON TOP OF THE STEEL ATTACHMENT PLATE TO THE DIMENSIONS SHOWN IN TABLE 2 TO SUIT MEASURED HOG.
5. INSTALL ELASTOMERIC BEARINGS ON TOP OF CEMENT MORTAR PADS.
6. THE ATTACHMENT PLATE WITH THE EPOXY MORTAR BLOCK MUST BE FIXED TO THE SOFFIT OF THE GIRDER BY BUTTERING A SUITABLE EPOXY PASTE EVENLY TO THE FULL SURFACE AREA OF THE TOP OF THE EPOXY MORTAR BLOCK, EXCEPT OVER THE PREDRILLED HOLES, TO ENSURE FULL CONTACT.
7. BOLT EPOXY BLOCK TO SOFFIT OF GIRDER.
8. EXCESS EPOXY PASTE MUST BE WIPED CLEAN.
9. CARRY OUT FINAL CHECK OF a1 - b4 DIMENSIONS PRIOR TO EPOXY PASTE HARDENING AND IMMEDIATELY AFTER INSTALLATION.
10. ERECT GIRDER ON TOP OF ELASTOMERIC BEARING AND BRACE AS NECESSARY.

NOT FOR CONSTRUCTION

ISSUE	DATE	REVISION	PREP	CHECK	AUTH
A	09-08-2021	ISSUED FOR TENDER	SM	LB	PB

LOCAL COUNCIL ROAD — SNOWY VALLEYS COUNCIL

REPLACEMENT OF TOWONG BRIDGE

ON TOWONG RD OVER MURRAY RIVER AT TOWONG

BEARINGS - SHEET A

Cardno®
Level 3, The Forum, 203 Pacific Highway
St. Leonards, NSW 2065
Tel: 02 9496 7700 Fax: 02 9439 5170
Web: www.cardno.com.au

SOUTH WEST REGION
NSW GOVERNMENT Transport for NSW

	PREPARED	CHECKED
DESIGN	J.Guzman	L.Bai
DRAWING	A.Javier	S.Mathie
APPROVED/ DESIGN QA RECORDS	P.Boesch	
DIRECTOR		

DRAWING SET No. DS2021/000055
BRIDGE No. B12447
ISSUE STATUS PRELIMINARY
ISSUE A | No OF SHEETS 57 | SHEET No 24

CAD No DS2017-002667-DC-BR-2001(05)

THIS DRAWING IS CONFIDENTIAL AND SHALL ONLY BE USED FOR THE PURPOSE OF THE NOMINATED PROJECT

PRODUCED: 25 September 2020 AT 9:17:17 AM USER: Stuart Mathie
FILE: DS2017-002667-DC-BR-2001(05)_PARKES BYPASS\Drawings\Build\05_XrfRMS-A1-SHT.dwg
PLOT DRIVER: NONE
PEN TABLE: -----

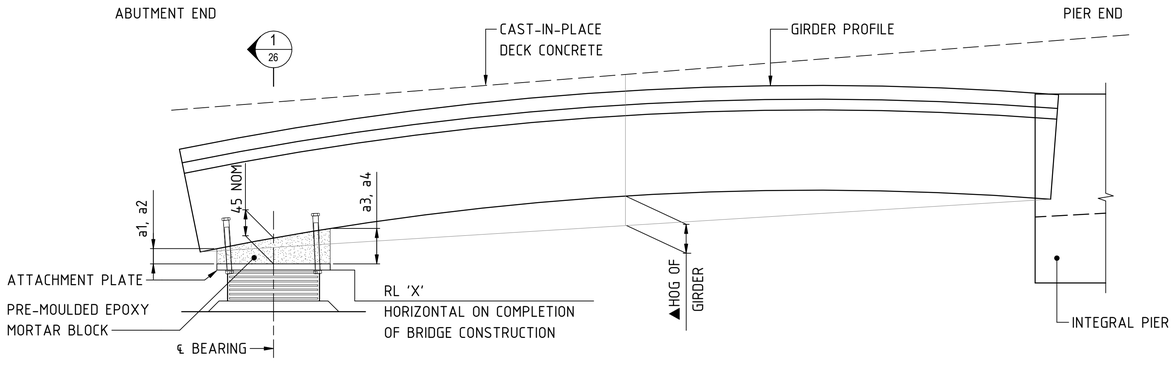

ELEVATION OF GIRDER AFTER DECK CONSTRUCTION
NOT TO SCALE

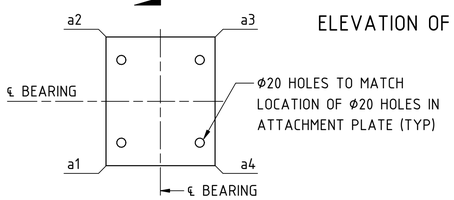

PLAN OF EPOXY MORTAR BLOCK
ABUTMENT A END

TABLE 2 - EPOXY MORTAR BLOCKS					
GIRDER ID	RANGE OF HOG ▲ OF GIRDER	VERTICAL DIMENSIONS			
		a1	a2	a3	a4
G1-A, G1-D, G1-C	30	30	41	61	50
	35	30	41	61	50
	40	29	40	61	50
	45	29	40	61	50
	50	29	40	62	51
	55	29	40	62	51
	60	29	40	62	51
	65	29	40	62	51
	70	28	39	63	52
G3-A, G3-D, G3-C		b1	b2	b3	b4
	30	30	41	61	50
	35	30	41	61	50
	40	29	40	61	50
	45	29	40	61	50
	50	29	40	62	51
	55	29	40	62	51
	60	29	40	62	51
	65	29	40	62	51
	70	28	39	63	52

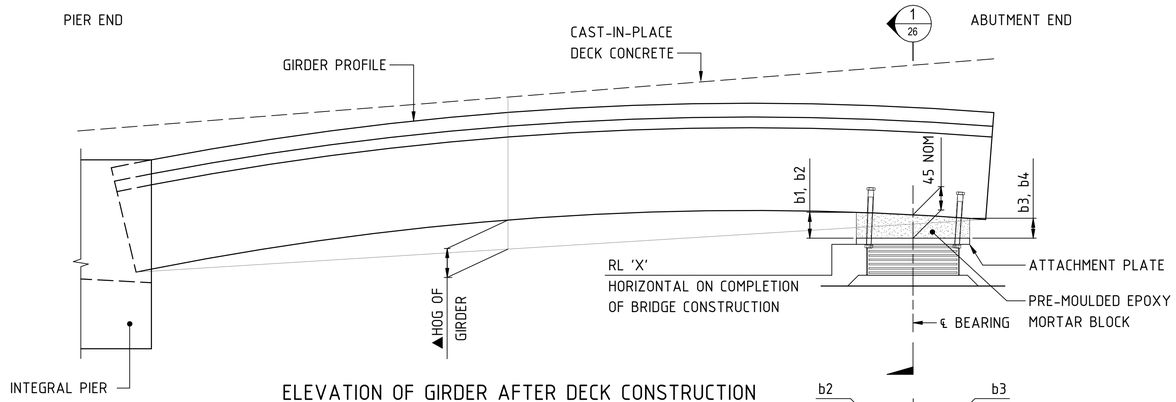

ELEVATION OF GIRDER AFTER DECK CONSTRUCTION
NOT TO SCALE

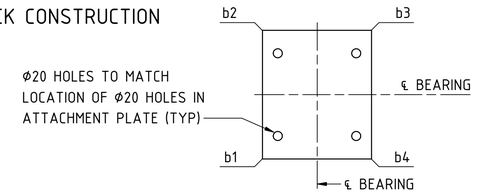

PLAN OF EPOXY MORTAR BLOCK
ABUTMENT B END

EPOXY MORTAR AND BEARING INSTALLATION NOTES

▲ DENOTES HOG OF GIRDER MUST BE MEASURED NOT MORE THAN 2 WEEKS PRIOR TO ERECTION OF GIRDER.

IF GIRDER HOG MEASURED NOT MORE THAN 2 WEEKS PRIOR TO ERECTION IS LOWER THAN THE ESTIMATED HOG VALUE, THEN NO ADJUSTMENT TO THE BEARING LEVELS IS REQUIRED.

IF GIRDER HOG MEASURED NOT MORE THAN 2 WEEKS PRIOR TO ERECTION IS HIGHER THAN THE MAXIMUM HOG VALUE, THEN THE CEMENT MORTAR PADS MUST BE LOWERED BY THE DIFFERENCE IN HOGS.

IF THE ANTICIPATED HOG OF A GIRDER AT 2 WEEKS IS OUTSIDE THE RANGE COVERED BY TABLE 2, THE CONTRACTOR MUST OBTAIN ADVICE FROM THE PRINCIPAL.

VALUES OF a1 TO b4 ACCOUNT FOR THE FOLLOWING:

- THE ESTIMATED HOG OF GIRDER NOT MORE THAN 2 WEEKS PRIOR TO GIRDER ERECTION.
- THE DEFLECTION OF GIRDER DUE TO THE CAST-IN-PLACE CONCRETE DECK.
- THE CROSSFALL AND THE LONGITUDINAL GRADE OF THE GIRDER BETWEEN SUPPORTED ENDS.

IN NO CASE MUST THE THICKNESS OF THE CEMENT MORTAR PAD BE LESS THAN 20mm AT ANY LOCATION.

IN NO CASE MUST THE THICKNESS OF THE EPOXY MORTAR BLOCK BE LESS THAN 10mm AT ANY LOCATION.

CEMENT MORTAR PADS AT AN ABUTMENT ARE TO BE CONSTRUCTED AFTER BACKFILLING BEHIND THAT ABUTMENT HAS BEEN COMPLETED. THE POSITIONS OF THE BEARINGS ARE TO BE ADJUSTED TO COMPENSATE FOR ANY HORIZONTAL MOVEMENT OF THE ABUTMENT DUE TO BACKFILLING.

FOR OTHER GENERAL NOTES RELATING TO THIS SHEET, SEE SHEET No. 24.

NOT FOR CONSTRUCTION

ISSUE	DATE	REVISION	PREP	CHECK	AUTH
A	09-08-2021	ISSUED FOR TENDER	SM	LB	PB

LOCAL COUNCIL ROAD — SNOWY VALLEYS COUNCIL

REPLACEMENT OF TOWONG BRIDGE

ON TOWONG RD OVER MURRAY RIVER AT TOWONG

BEARINGS - SHEET B

Cardno
Cardno (NSW/ACT) Pty Ltd | ABN 95 001 145 035
Level 9, The Forum, 203 Pacific Highway
St. Leonards, NSW 2065
Tel: 02 9496 7700 Fax: 02 9439 5170
Web: www.cardno.com.au

SOUTH WEST REGION
NSW GOVERNMENT — Transport for NSW

	PREPARED	CHECKED
DESIGN	J.Guzman	L.Bai
DRAWING	A.Javier	S.Mathie

APPROVED/ DESIGN QA RECORDS: P.Boesch
DIRECTOR

DRAWING SET No. DS2021/000055
BRIDGE No. B12447
ISSUE STATUS PRELIMINARY
ISSUE A | No OF SHEETS 57 | SHEET No 25

CAD No DS2017-002667-DC-BR-2001(05)

THIS DRAWING IS CONFIDENTIAL AND SHALL ONLY BE USED FOR THE PURPOSE OF THE NOMINATED PROJECT

PRODUCED: 25 September 2020 AT 9:17:17 AM USER: Stuart Mathie
FILE PATH: N:\Projects\800\PT\88100_PARKES BYPASS\Drawings\Bund\05_X\TRMS-A1-SHT.dwg
PLOT DRIVER: NONE
PEN TABLE: ----

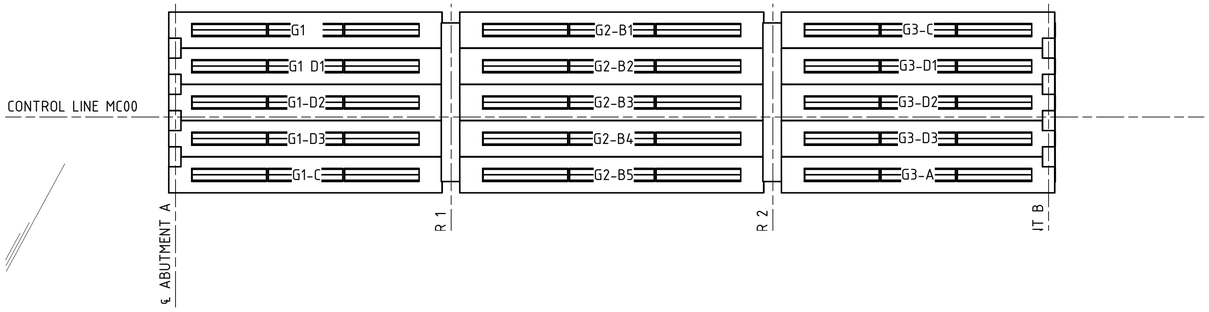

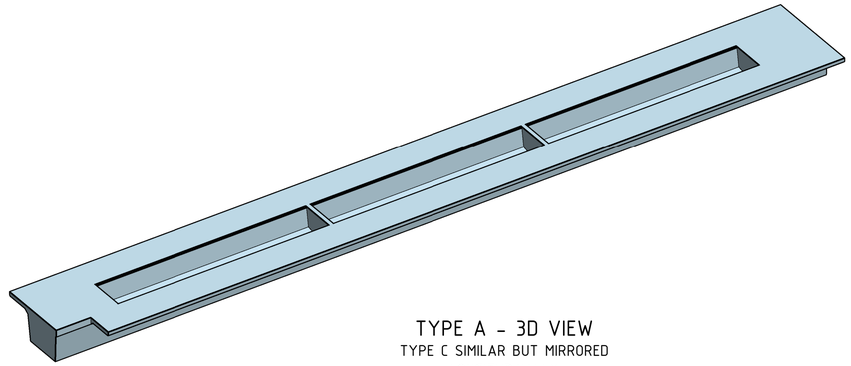

TYPE A - 3D VIEW

TYPE C SIMILAR BUT MIRRORED LONGITUDINALLY

TABLE 1 - GIRDER 'TYPE A' AND 'TYPE C' SETOUT

GIRDER	'b'	'n'	RL	COORDINATES	
				EASTING	NORTHING
G1-A	400	01	253.584	589678.355	6001839.631
G3-A	440	02	254.584	589654.371	6001837.353
G1-C	400	01	253.395	589673.838	6001847.939
G3-C	440	02	254.773	589658.889	6001829.045

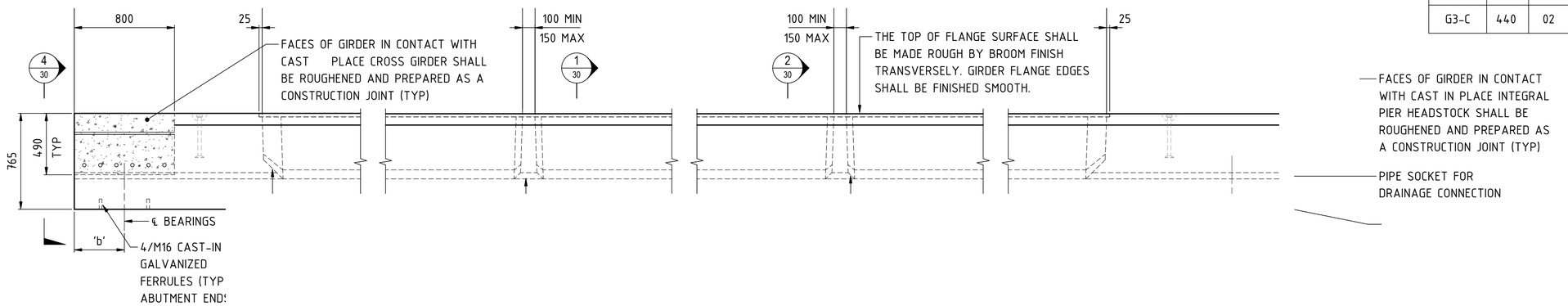

MARK THIS END:
'A
'A

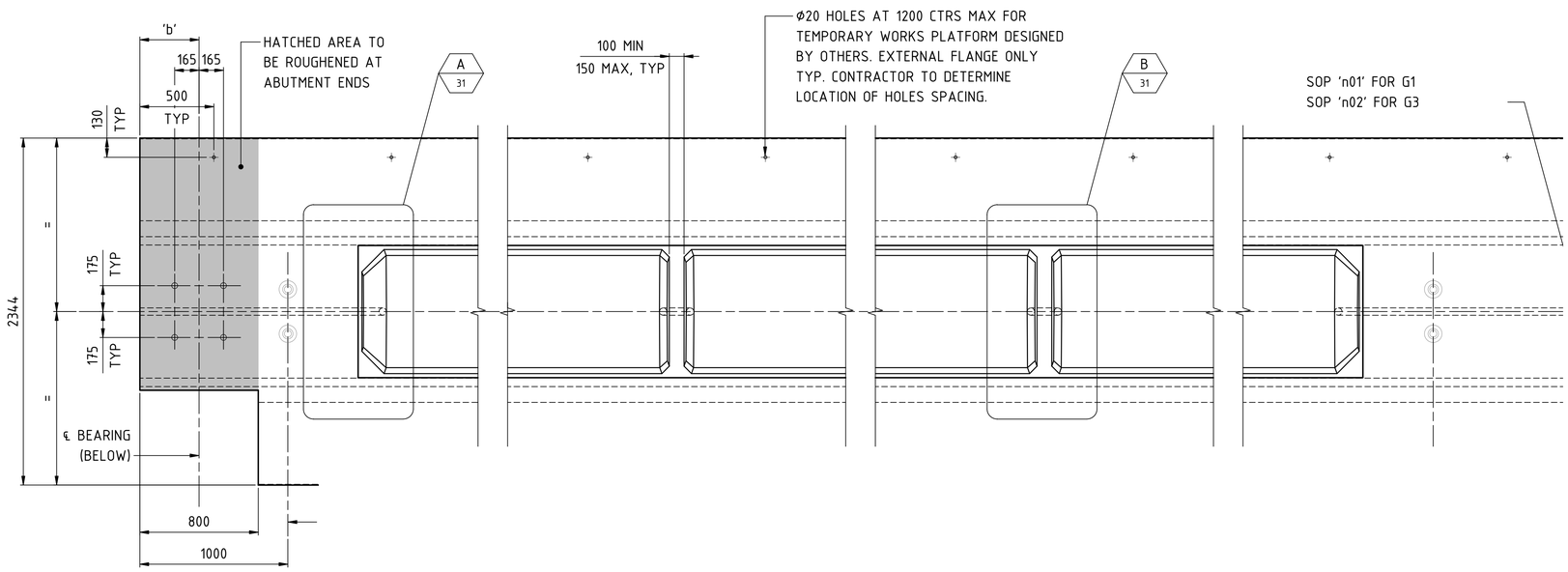

Transport for NSW

PRODUCED: 25 September 2020 AT 9:17:17 AM USER: Stuart Mathie
FILE: PATH: V:\Projects\800\PY18100_PARKES BYPASS\Drawings\Build\05_Xrf\RMS-A1-SHT.dwg
PLOT DRIVER: NONE
PEN TABLE: ----

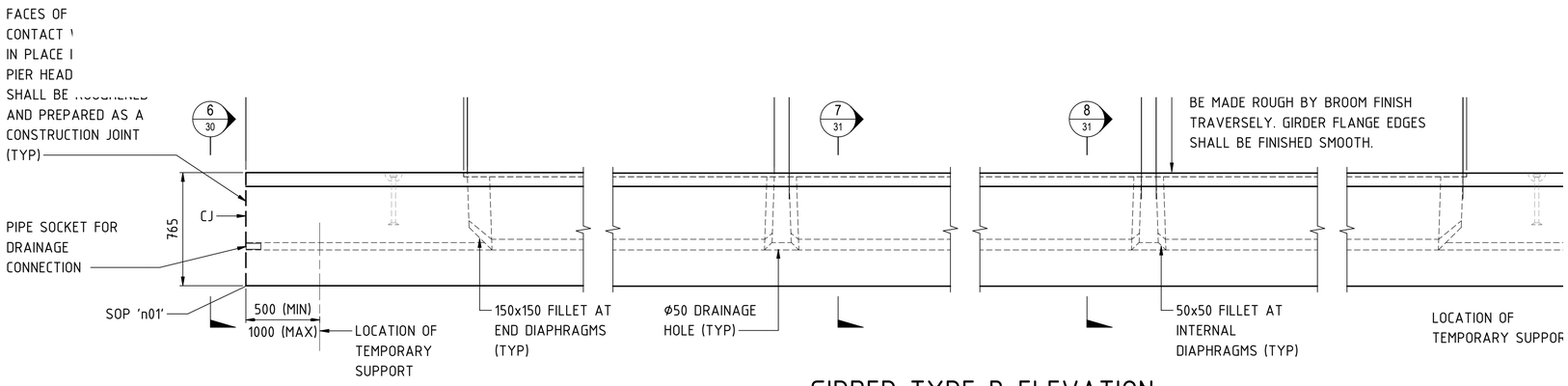

MARK THIS END:
'PIER 1' FOR G2-B1 TO G2-B5

GIRDER TYPE B ELEVATION

STRANDS NOT SHOWN

MARK
'PIER

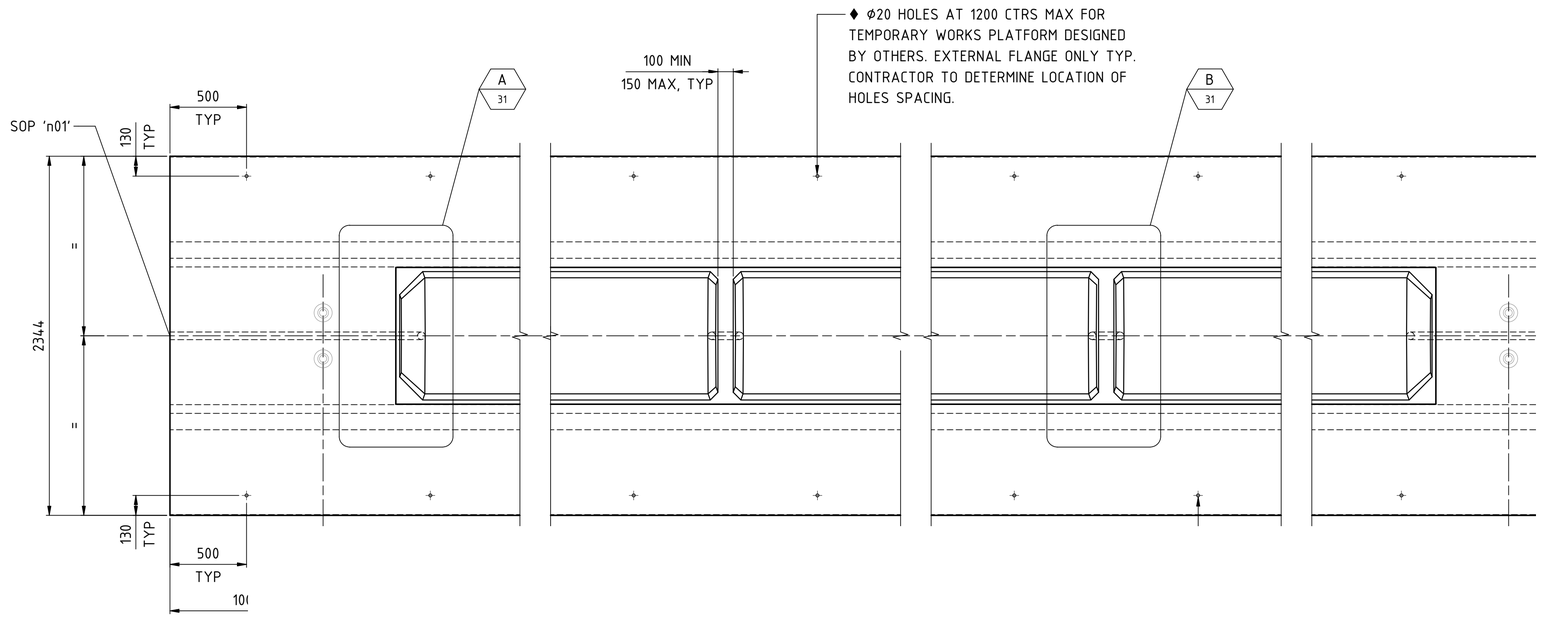

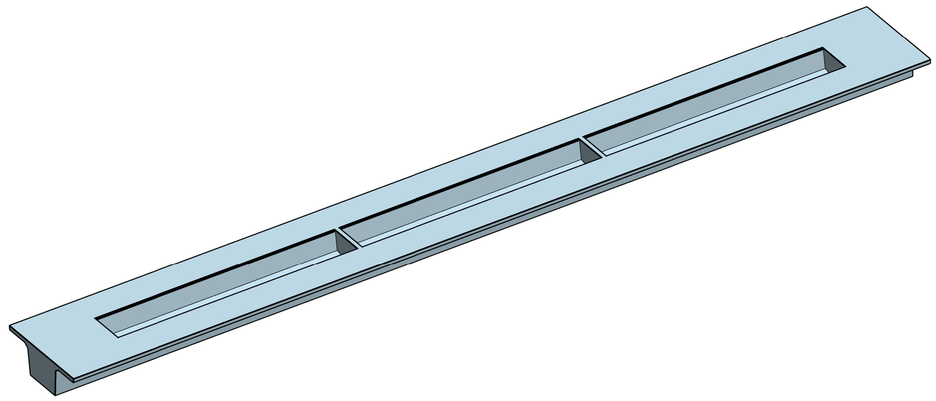

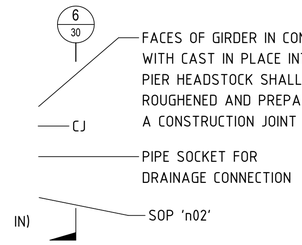

5

TABLE 2 - GIRDER 'TYPE B' SETC

GIRDER	'n'	RL	E
G2-B1	01	253.647	58
	02	254.710	58
G2-B2	01	253.600	58
	02	254.663	58
G2-B3	01	253.552	58
	02	254.615	58
G2-B4	01	253.505	58
	02	254.568	58
G2-B5	01	253.458	58
	02	254.521	58

℄ GIRDER

SOP 'n02'

GENERAL NOTES

SCALE 0 400 800 1200 1600 2000mm OR AS SHOWN

# DENOTES LENGTHS AND MEMBER OF INTERNAL FORMS SHALL BE DETERMINED BY MANUFACTURER IN THE CASTING YARD.
FOR OTHER GENERAL NOTES RELATING TO THIS SHEET, SEE SHEET No. 30 AND 31.

NOT FOR CONSTRUCTION

ISSUE	DATE	REVISION	PREP	CHECK	AUTH
A	09-08-2021	ISSUED FOR TENDER	SM	LB	PB

LOCAL COUNCIL ROAD — SNOWY VALLEYS COUNCIL

REPLACEMENT OF TOWONG BRIDGE

ON TOWONG RD OVER MURRAY RIVER AT TOWONG

PSC GIRDERS CONCRETE - SHEET B

Cardno (NSW/ACT) Pty Ltd | ABN 95 001 145 035
Level 9, The Forum, 203 Pacific Highway
St. Leonards, NSW 2065
Tel: 02 9496 7700. Fax: 02 9439 5170
Web: www.cardno.com.au

SOUTH WEST REGION

	PREPARED	CHECKED
DESIGN	J.Guzman	L.Bai
DRAWING	A.Javier	S.Mathie
APPROVED/ DESIGN QA RECORDS	P.Boesch	
	DIRECTOR	

DRAWING SET No. DS2021/000055

BRIDGE No. B12447

ISSUE STATUS PRELIMINARY

ISSUE A | No OF SHEETS 57 | SHEET No 28

CAD No DS2017-002667-DC-BR-2001(05)

THIS DRAWING IS CONFIDENTIAL AND SHALL ONLY BE USED FOR THE PURPOSE OF THE NOMINATED PROJECT

PRODUCED: 25 September 2020 AT 9:17:17 AM USER: Stuart Mathie
FILE: J:\2017\Projects\800\PY18100_PARKES BYPASS\Drawings\Build\05_Xrf\RMS-A1-SHT.dwg
PLOT DRIVER: NONE
PEN TABLE: ----

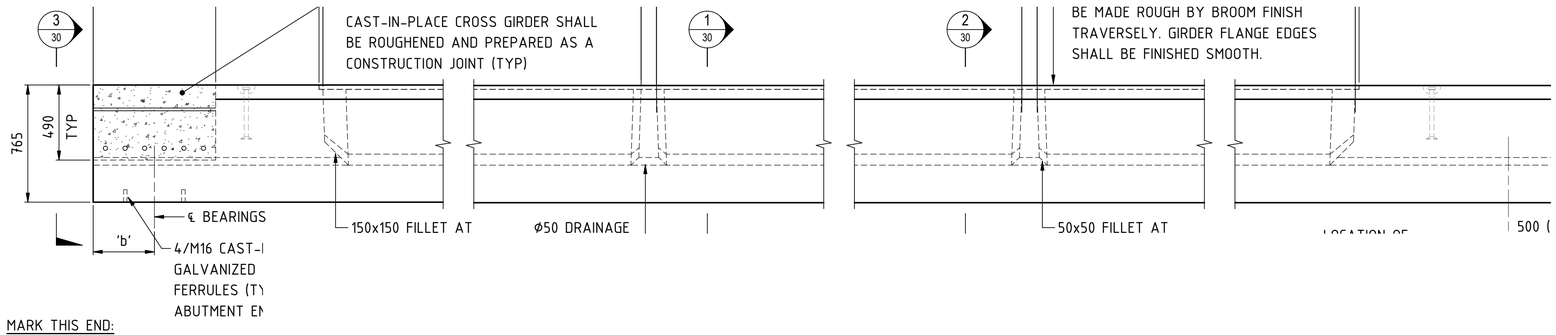

MARK THIS END:
'ABUTMENT A' FOR G1-D1 TO G1-D3
'ABUTMENT B' FOR G3-D1 TO G3-D3

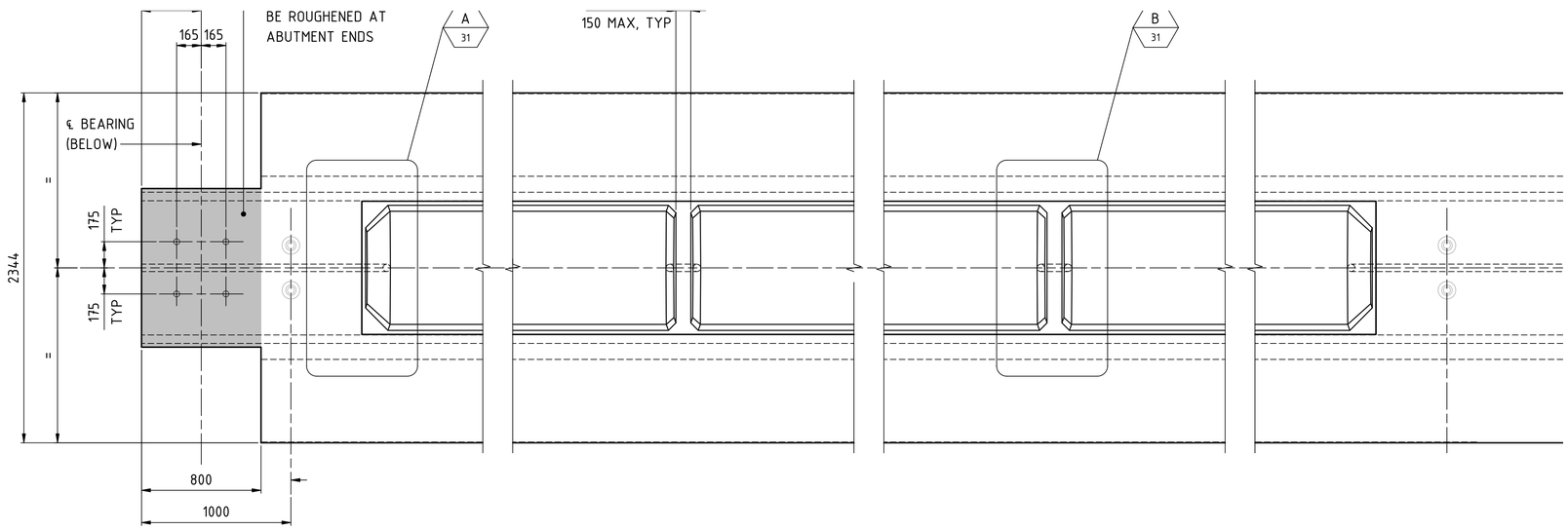

TABLE 3 - GIRDER 'TYPE D' SETOUT

GIRDER	'b'	'n'	RL	COORDINATES	
				EASTING	NORTHING
G1-D1	400	01	253.537	589677.226	6001841.707
G1-D2	400	01	253.489	589676.097	6001843.785
G1-D3	400	01	253.442	589674.967	6001845.862
G3-D1	440	02	254.726	589657.760	6001831.122
G3-D2	440	02	254.678	589656.630	6001833.199
G3-D3	440	02	254.631	589655.501	6001835.276

GENERAL NOTES

SCALE 0 400 800 1200 1600 2000mm OR AS SHOWN

# DENOTES LENGTHS AND MEMBER OF INTERNAL FORMS SHALL BE DETERMINED BY MANUFACTURER IN THE CASTING YARD.
FOR OTHER GENERAL NOTES RELATING TO THIS SHEET, SEE SHEET No. 30 AND 31.

NOT FOR CONSTRUCTION

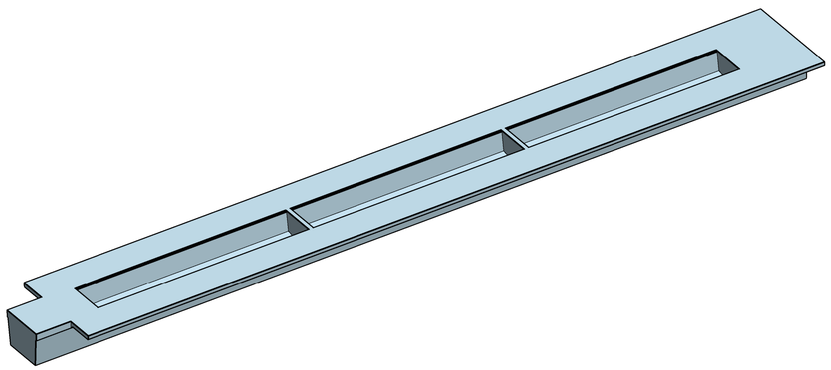

ISSUE	DATE	REVISION	PREP	CHECK	AUTH
A	09-08-2021	ISSUED FOR TENDER	SM	LB	PB

LOCAL COUNCIL ROAD — SNOWY VALLEYS COUNCIL

REPLACEMENT OF TOWONG BRIDGE
ON TOWONG RD OVER MURRAY RIVER AT TOWONG

PSC GIRDERS CONCRETE - SHEET C

Cardno
Level 9, The Forum, 203 Pacific Highway
St. Leonards, NSW 2065
Tel: 02 9496 7700 Fax: 02 9439 5170
Web: www.cardno.com.au

SOUTH WEST REGION
NSW GOVERNMENT Transport for NSW

	PREPARED	CHECKED
DESIGN	J.Guzman	L.Bai
DRAWING	A.Javier	S.Mathie

APPROVED/ DESIGN QA RECORDS P.Boesch
DIRECTOR

DRAWING SET No. DS2021/000055
BRIDGE No. B12447
ISSUE STATUS PRELIMINARY
ISSUE A | No OF SHEETS 57 | SHEET No 29

CAD No DS2017-002667-DC-BR-2001(05)

THIS DRAWING IS CONFIDENTIAL AND SHALL ONLY BE USED FOR THE PURPOSE OF THE NOMINATED PROJECT

PRODUCED: 25 September 2020 AT 9:17:17 AM USER: Stuart Mathie
FILE PATH: V:\Projects\800\PT181\00_PARKES BYPASS\Drawings\Build\05_XrfRMS-A1-SHT.dwg
PLOT DRIVER: NONE
PEN TABLE: ----

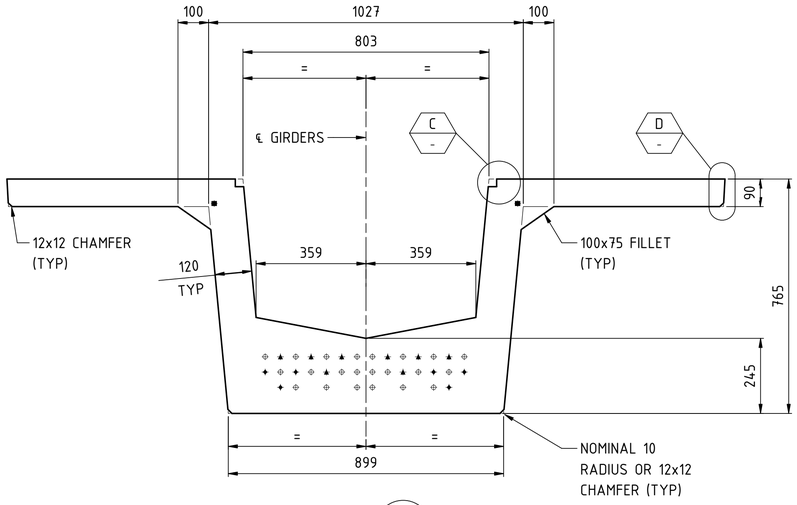

SECTION 7 / 28

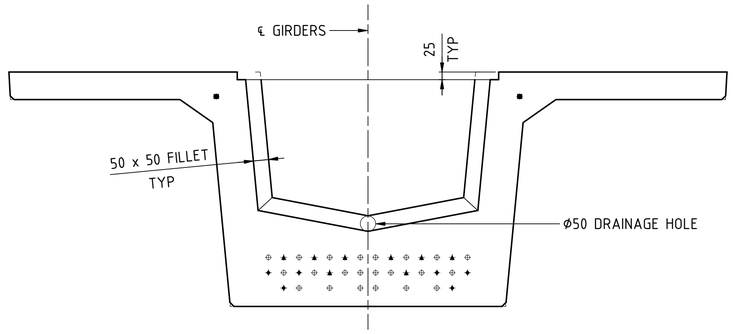

SECTION 8 / 28

FOR DIMENSION NOT SHOWN SEE SECTION 7 / -

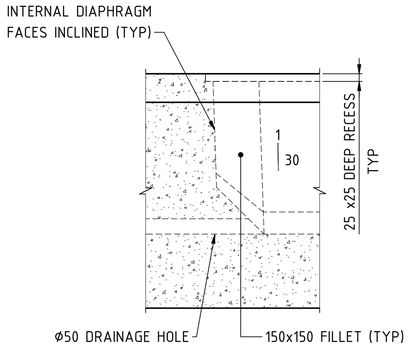

SECTION 9 / -

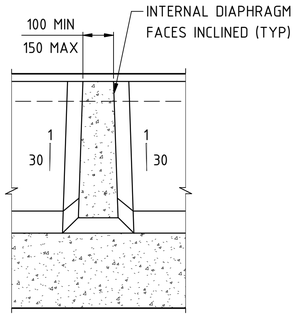

SECTION 10 / -

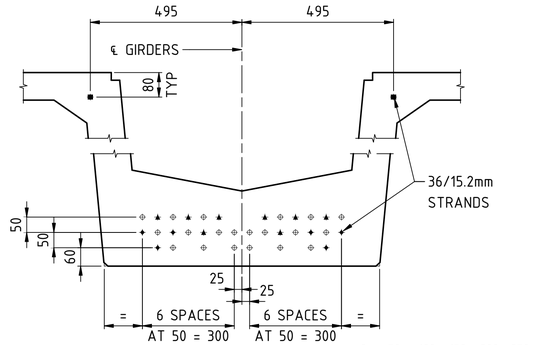

STRAND LAYOUT
SPAN 1 AND 3

- ■ DENOTES LENGTHS OF STRAND DEBONDED = 800
- ▲ DENOTES LENGTHS OF STRAND DEBONDED = 2000
- ✦ DENOTES LENGTHS OF STRAND DEBONDED = 4000

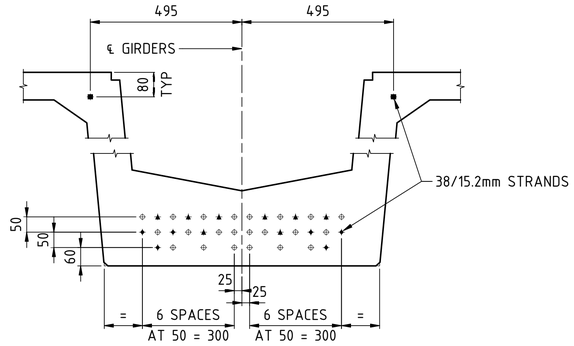

STRAND LAYOUT
SPAN 2

- ■ DENOTES LENGTHS OF STRAND DEBONDED = 800
- ▲ DENOTES LENGTHS OF STRAND DEBONDED = 2000
- ✦ DENOTES LENGTHS OF STRAND DEBONDED = 4000

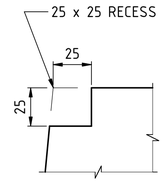

DETAIL C / 30 C / -

0 20 40 60 80 100mm

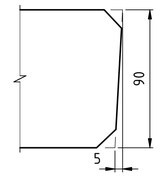

DETAIL D / 30 D / -

0 20 40 60 80 100mm

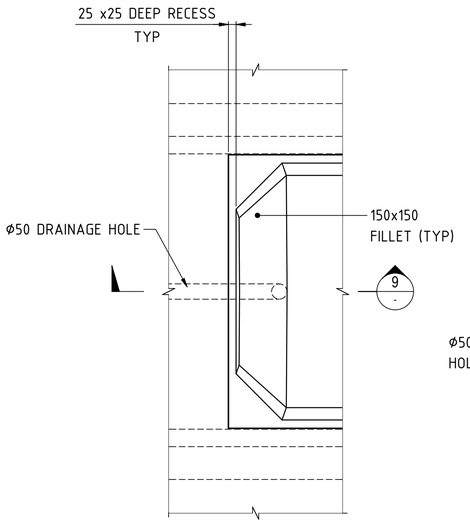

DETAIL A / 27 A / 28 A / 29

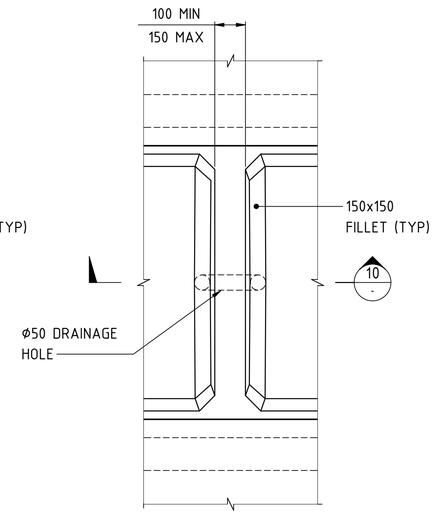

DETAIL B / 27 B / 28 B / 29

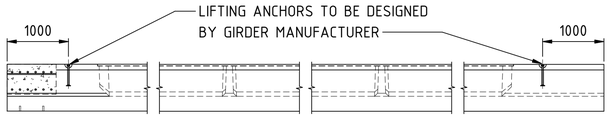

LIFTING POINTS DIAGRAM
NOT TO SCALE

TEMPORARY PROPPING NOTES

TEMPORARY PROPPING SYSTEM SHALL BE DESIGNED BY THE CONTRACTOR AND SHALL COMPLY WITH AS 3610. THE PROPPING SYSTEM SHALL BE DESIGNED TO CARRY THE FOLLOWING MINIMUM LOADS:

- WEIGHT OF SUPER-T GIRDERS
- CAST IN SITU SLAB, INCLUDING DIAPHRAGMS
- FORMWORK FOR DIAPHRAGMS
- WIND LOADING AS PER AS 1170.2
- MINIMUM CONSTRUCTION LOAD OF 0.5kPa
- TEMPORARY SUPPORT LOCATION IS LOCATED AT 500mm FROM GIRDER ENDS.

THE DESIGN OF TEMPORARY WORKS SHALL BE INDEPENDENTLY CHECKED AND CERTIFIED BY A CHARTERED STRUCTURAL ENGINEER.

AT LEAST FOUR WEEKS PRIOR TO ERECTION OF THE PROPPING, THE CONTRACTOR SHALL SUBMIT FULLY DETAILED DRAWING OF THE PROPOSED PROPPING SYSTEM TO THE ADMINISTRATOR.

TEMPORARY PROPPING SYSTEM, INCLUSIVE OF FOUNDATIONS, SHALL BE DESIGNED TO LIMIT SETTLEMENT TO LESS THAN 5mm UNDER ALL LOADING SPECIFIED ABOVE.

TEMPORARY PROPPING SHALL INCORPORATE BRACING TO RESTRAIN GIRDERS AGAINST ROLLING ABOUT THEIR LONGITUDINAL AXIS AND LEAVE THE GIRDER FREE TO ROTATE ABOUT THEIR LATERAL AXIS.

CONTRACTOR MAY CONSIDER USE OF TEMPORARY BRACKETS ATTACHED AT PIER TOP IN LIEU OF PROPPING SYSTEM SUPPORTED FROM GROUND. PIER HAS BEEN DESIGNED TO ALLOW FOR UNBALANCED LOADS SUCH AS EITHER SPAN BEING FULLY ERECTED AND, SLAB POURED ON ONE SPAN WITH GIRDERS ERECTED ON BOTH SPANS. TWO ADJACENT GIRDERS IN A SPAN SHALL BE PLACED AT A TIME WITH THE CORRESPONDING GIRDERS IN THE OTHERS SPAN PLACED NEXT.

THE TEMPORARY BEARING SHALL BE DESIGNED TO NOT SLIP UNDER THE LOADING SPECIFIED ABOVE.

GENERAL NOTES

SCALE 0 200 400 600 800 1000mm OR AS SHOWN

FOR OTHER GENERAL NOTES RELATING TO THIS SHEET, SEE SHEET No. 30

NOT FOR CONSTRUCTION

ISSUE	DATE	REVISION	PREP	CHECK	AUTH
A	09-08-2021	ISSUED FOR TENDER	SM	LB	PB

LOCAL COUNCIL ROAD — SNOWY VALLEYS COUNCIL

REPLACEMENT OF TOWONG BRIDGE

ON TOWONG RD OVER MURRAY RIVER AT TOWONG

PSC GIRDERS CONCRETE - SHEET E

Cardno
Cardno (NSW/ACT) Pty Ltd | ABN 95 001 145 035
Level 9, The Forum, 203 Pacific Highway
St. Leonards, NSW 2065
Tel: 02 9496 7700 Fax: 02 9439 5170
Web: www.cardno.com.au

SOUTH WEST REGION
NSW GOVERNMENT Transport for NSW

	PREPARED	CHECKED
DESIGN	J.Guzman	L.Bai
DRAWING	A.Javier	S.Mathie
APPROVED/ DESIGN QA RECORDS	P.Boesch	
DIRECTOR		

DRAWING SET No. DS2021/000055
BRIDGE No. B12447
ISSUE STATUS PRELIMINARY
ISSUE A | No OF SHEETS 57 | SHEET No 31

CAD No DS2017-002667-DC-BR-2001(05)

THIS DRAWING IS CONFIDENTIAL AND SHALL ONLY BE USED FOR THE PURPOSE OF THE NOMINATED PROJECT

PRODUCED: 25 September 2020 AT 9:17:17 AM USER: Stuart Mathie
FILE: DS2017-002667-DC-BR-2001(05)_X:\Projects\800\PY\78100_PARKES BYPASS\Drawings\Build\05_X-Y\RMS-A1-SHT.dwg
PLOT DRIVER: NONE
PEN TABLE: ----

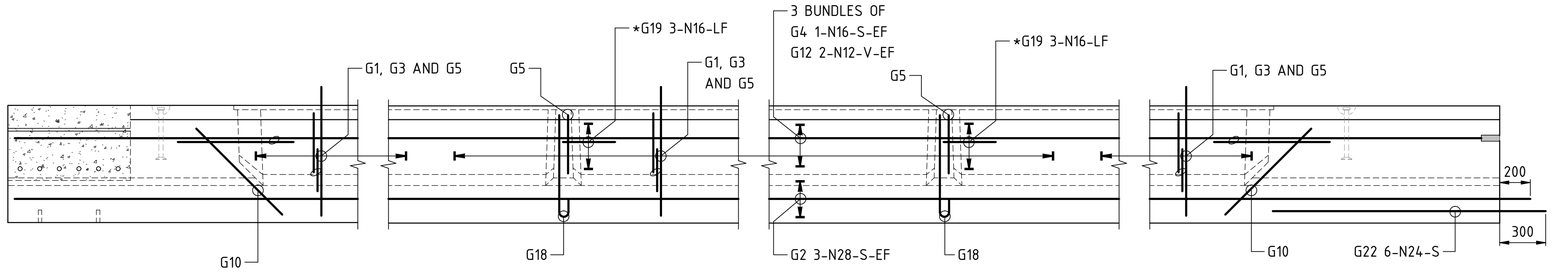

GIRDER TYPE A ELEVATION

STRANDS, END DIAPHRAGMS AND TOP FLANGE REINFORCEMENT NOT SHOWN FOR CLARITY

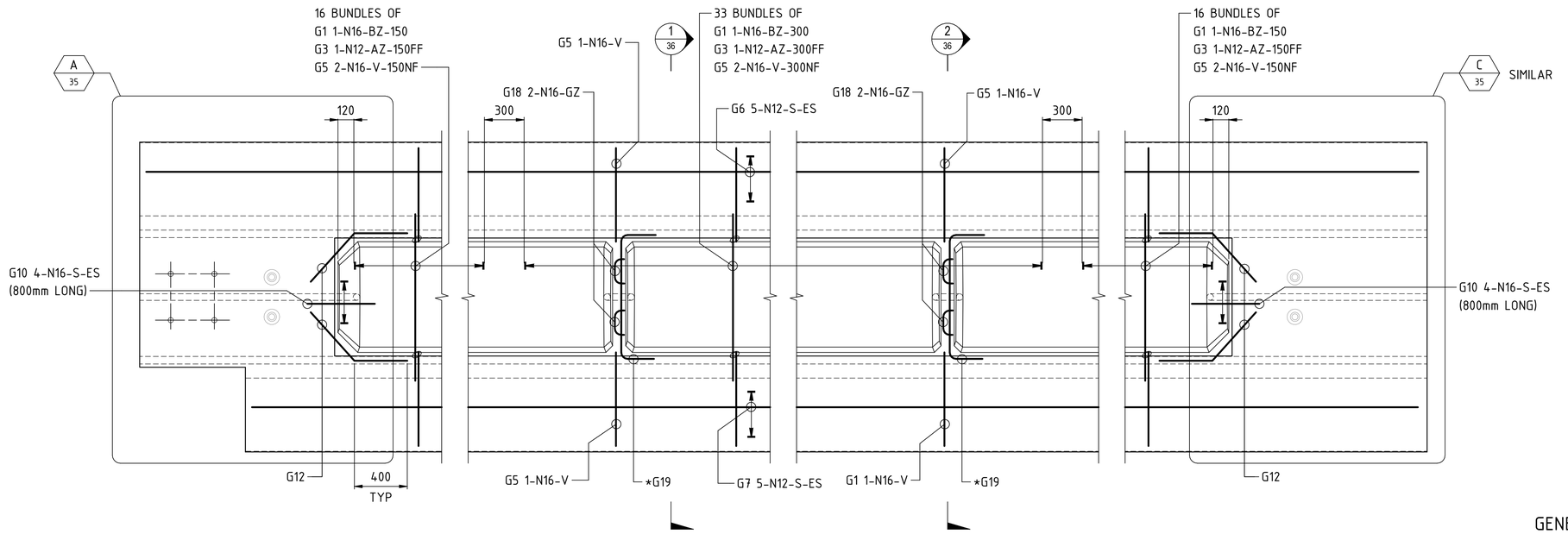

GIRDER TYPE A PLAN

GIRDER TYPE C (SIMILAR BUT MIRRORED LONGITUDINALLY)

STRANDS AND END DIAPHRAGMS, WEB AND BOTTOM FLANGE REINFORCEMENT NOT SHOWN FOR CLARITY

GENERAL NOTES

SCALE 0 0.4 0.8 1.2 1.6 2m OR AS SHOWN

FOR OTHER GENERAL NOTES RELATING TO THIS SHEET, SEE SHEET No. 37

NOT FOR CONSTRUCTION

ISSUE	DATE	REVISION	PREP	CHECK	AUTH
A	09-08-2021	ISSUED FOR TENDER	SM	LB	PB

LOCAL COUNCIL ROAD — SNOWY VALLEYS COUNCIL

REPLACEMENT OF TOWONG BRIDGE

ON TOWONG RD OVER MURRAY RIVER AT TOWONG

PSC GIRDERS REINFORCEMENT - SHEET A

Cardno®
Level 3, The Forum, 203 Pacific Highway
St. Leonards, NSW 2065
Tel: 02 9496 7700 Fax: 02 9439 5170
Web: www.cardno.com.au

NSW GOVERNMENT Transport for NSW — SOUTH WEST REGION

	PREPARED	CHECKED
DESIGN	J.Guzman	L.Bai
DRAWING	A.Javier	S.Mathie

APPROVED/ DESIGN QA RECORDS: P.Boesch — DIRECTOR

DRAWING SET No. DS2021/000055

BRIDGE No. B12447

ISSUE STATUS: PRELIMINARY

ISSUE A | No OF SHEETS 57 | SHEET No 32

CAD No DS2017-002667-DC-BR-2001(05)

THIS DRAWING IS CONFIDENTIAL AND SHALL ONLY BE USED FOR THE PURPOSE OF THE NOMINATED PROJECT

PRODUCED: 25 September 2020 AT 9:17:17 AM USER: Stuart Mathie
FILE PATH: V:\Projects\800\PY18100_PARKES BYPASS\Drawings\Build\05_XrfRMS-A1-SHT.dwg
PLOTTER DRIVER: NONE
PEN TABLE: ----

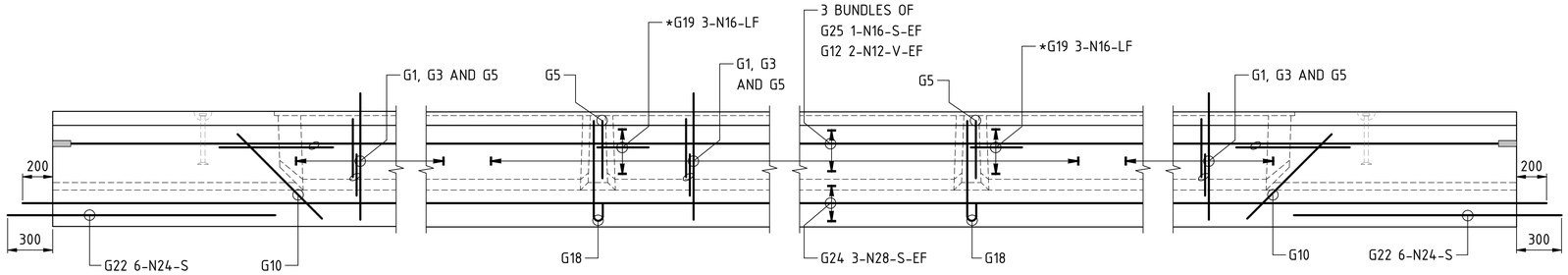

GIRDER TYPE B ELEVATION

STRANDS, END DIAPHRAGMS AND TOP FLANGE REINFORCEMENT NOT SHOWN FOR CLARITY

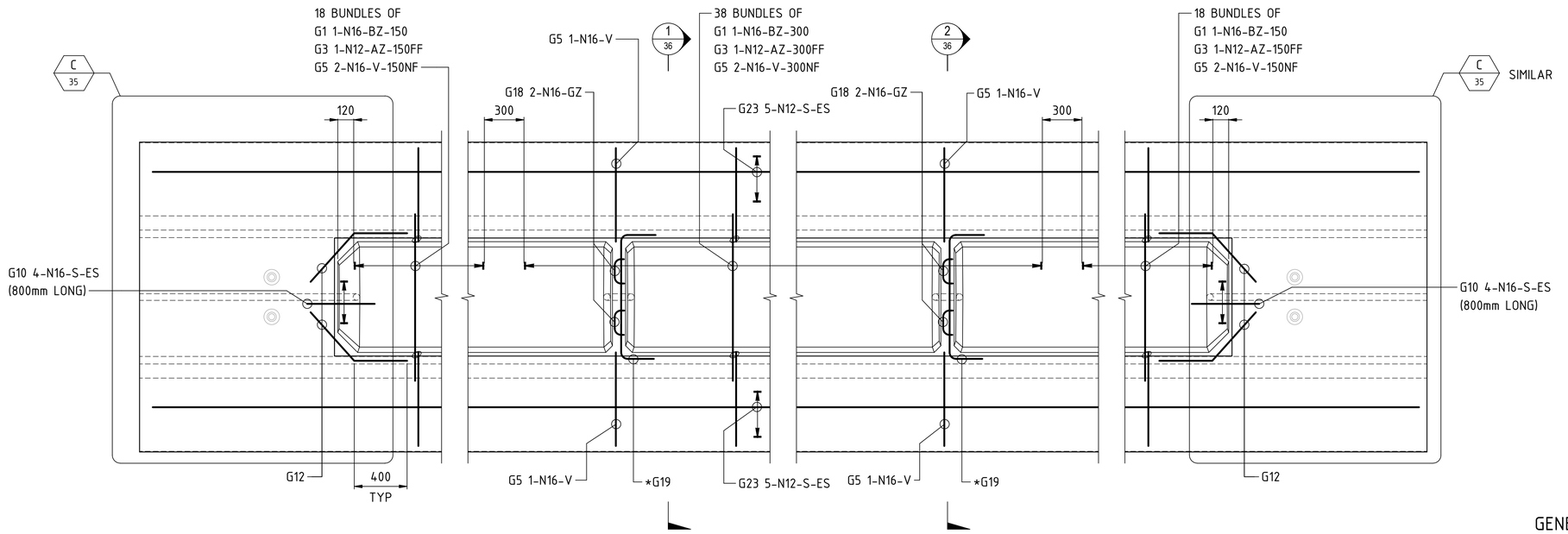

GIRDER TYPE B PLAN

STRANDS AND END DIAPHRAGMS, WEB AND BOTTOM FLANGE REINFORCEMENT NOT SHOWN FOR CLARITY

GENERAL NOTES

SCALE 0 0.4 0.8 1.2 1.6 2m OR AS SHOWN

FOR OTHER GENERAL NOTES RELATING TO THIS SHEET, SEE SHEET No. 37

NOT FOR CONSTRUCTION

ISSUE	DATE	REVISION	PREP	CHECK	AUTH
A	09-08-2021	ISSUED FOR TENDER	SM	LB	PB

LOCAL COUNCIL ROAD — SNOWY VALLEYS COUNCIL

REPLACEMENT OF TOWONG BRIDGE

ON TOWONG RD OVER MURRAY RIVER AT TOWONG

PSC GIRDERS REINFORCEMENT - SHEET B

Cardno®
Level 3, The Forum, 203 Pacific Highway
St. Leonards, NSW 2065
Tel: 02 9496 7700 Fax: 02 9439 5170
Web: www.cardno.com.au

NSW GOVERNMENT Transport for NSW — SOUTH WEST REGION

	PREPARED	CHECKED
DESIGN	J.Guzman	L.Bai
DRAWING	A.Javier	S.Mathie

APPROVED/ DESIGN QA RECORDS P.Boesch
DIRECTOR

DRAWING SET No. DS2021/000055

BRIDGE No. B12447

ISSUE STATUS PRELIMINARY

ISSUE A | No OF SHEETS 57 | SHEET No 33

CAD No DS2017-002667-DC-BR-2001(05)

THIS DRAWING IS CONFIDENTIAL AND SHALL ONLY BE USED FOR THE PURPOSE OF THE NOMINATED PROJECT

PRODUCED: 25 September 2020 AT 9:17:17 AM USER: Stuart Mathie
FILE PATH: V:\Projects\800\PY18\100_PARKES BYPASS\Drawings\Build\05_XrfRMS-A1-SHT.dwg
PLOT DRIVER: NONE
PEN TABLE: ----

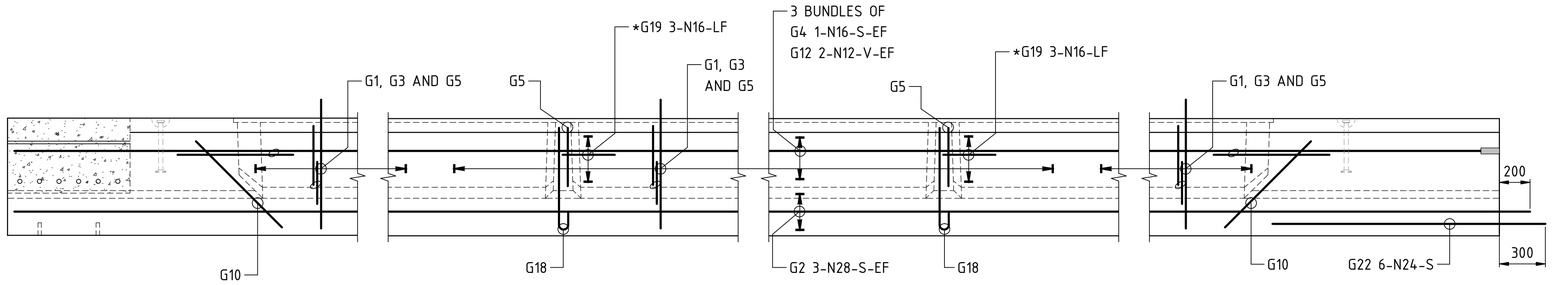

GIRDER TYPE D ELEVATION

STRANDS, END DIAPHRAGMS AND TOP FLANGE REINFORCEMENT NOT SHOWN FOR CLARITY

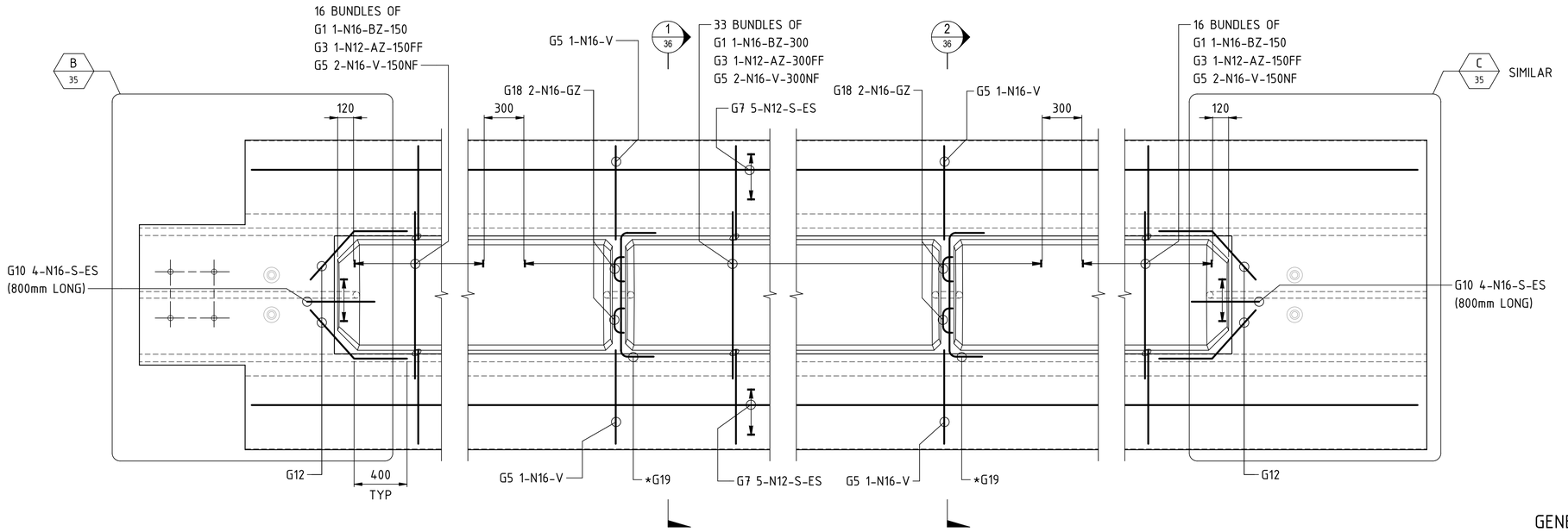

GIRDER TYPE D PLAN

STRANDS AND END DIAPHRAGMS, WEB AND BOTTOM FLANGE REINFORCEMENT NOT SHOWN FOR CLARITY

GENERAL NOTES

SCALE 0 0.4 0.8 1.2 1.6 2m OR AS SHOWN

FOR OTHER GENERAL NOTES RELATING TO THIS SHEET, SEE SHEET No. 37

NOT FOR CONSTRUCTION

ISSUE	DATE	REVISION	PREP	CHECK	AUTH
A	09-08-2021	ISSUED FOR TENDER	SM	LB	PB

LOCAL COUNCIL ROAD — SNOWY VALLEYS COUNCIL

REPLACEMENT OF TOWONG BRIDGE

ON TOWONG RD OVER MURRAY RIVER AT TOWONG

PSC GIRDERS REINFORCEMENT - SHEET C

Cardno®
Level 3, The Forum, 203 Pacific Highway
St. Leonards, NSW 2065
Tel: 02 9496 7700 Fax: 02 9439 5170
Web: www.cardno.com.au

NSW GOVERNMENT Transport for NSW — SOUTH WEST REGION

	PREPARED	CHECKED
DESIGN	J.Guzman	L.Bai
DRAWING	A.Javier	S.Mathie

APPROVED/ DESIGN QA RECORDS: P.Boesch — DIRECTOR

DRAWING SET No. DS2021/000055

BRIDGE No. B12447

ISSUE STATUS PRELIMINARY

ISSUE A | No OF SHEETS 57 | SHEET No 34

CAD No DS2017-002667-DC-BR-2001(05)

THIS DRAWING IS CONFIDENTIAL AND SHALL ONLY BE USED FOR THE PURPOSE OF THE NOMINATED PROJECT

PRODUCED: 25 September 2020 AT 9:17:17 AM USER: Stuart Mathie
FILE DATA: V:\Projects\8000\PF18100_PARKES BYPASS\Drawings\Build\05_XrfRMS-A1-SHT.dwg
PLOT DRIVER: NONE
PEN TABLE: ----

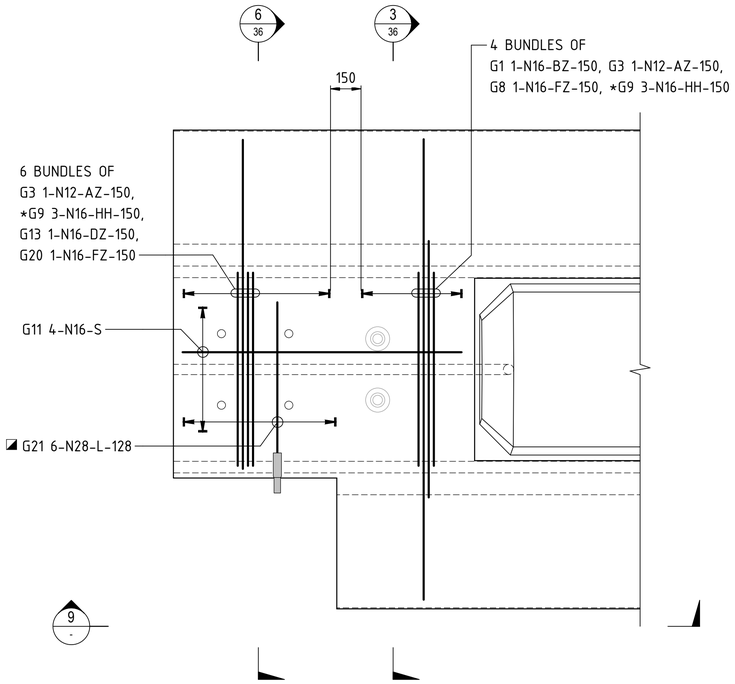

DETAIL A 32

AT ABUTMENTS END OF GIRDER
WEB AND BOTTOM FLANGE REINFORCEMENT NOT SHOWN FOR CLARITY

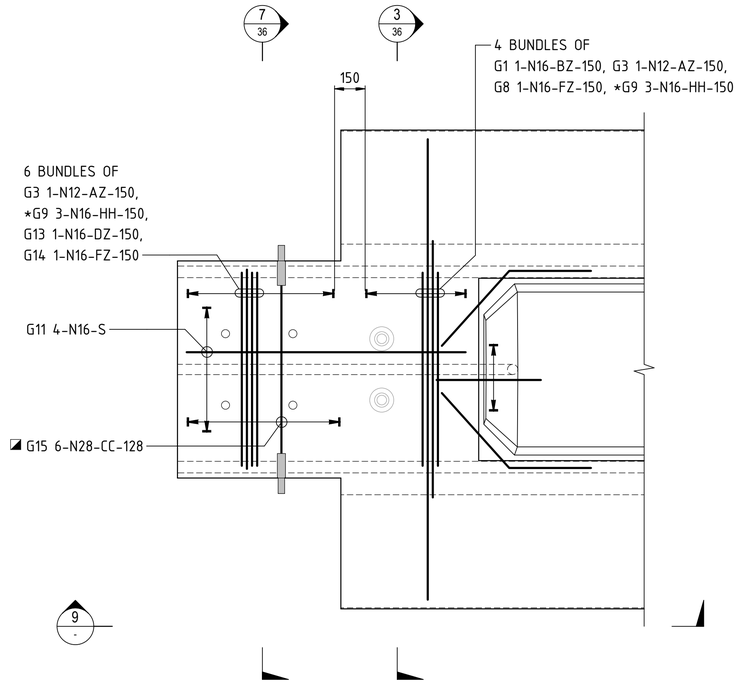

DETAIL B 34

AT ABUTMENTS END OF GIRDER
WEB AND BOTTOM FLANGE REINFORCEMENT NOT SHOWN FOR CLARITY

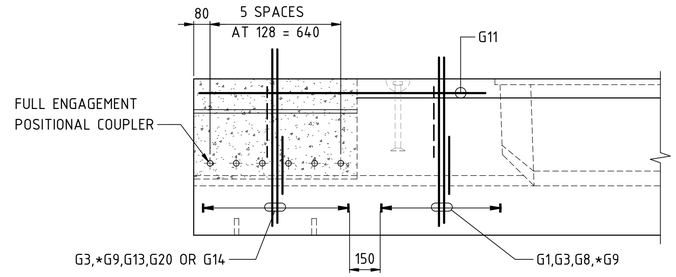

ELEVATION 9 -

AT ABUTMENTS END OF GIRDER
LONGITUDINAL FLANGE AND WEB REINFORCEMENT NOT SHOWN FOR CLARITY

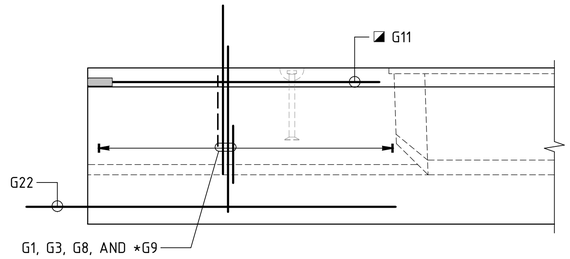

ELEVATION 10 -

AT PIERS END OF GIRDER
LONGITUDINAL FLANGE AND WEB REINFORCEMENT NOT SHOWN FOR CLARITY

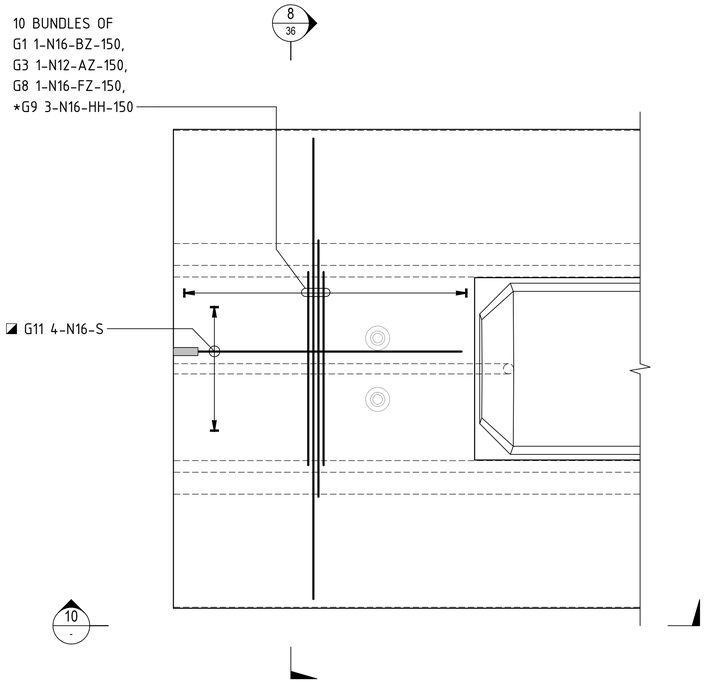

DETAIL C 32 C 33 C 34

AT PIER 1 AND 2 END OF GIRDER
WEB AND BOTTOM FLANGE REINFORCEMENT NOT SHOWN FOR CLARITY

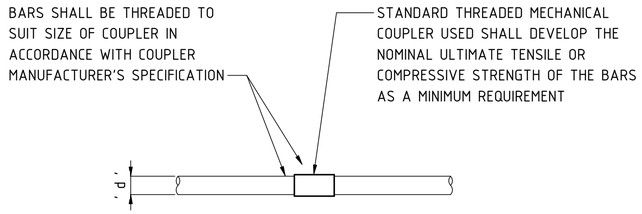

MECHANICAL COUPLER DETAIL

NOT TO SCALE

GENERAL NOTES

SCALE 0 300 600 900 1200 1500mm OR AS SHOWN

FOR OTHER GENERAL NOTES RELATING TO THIS SHEET, SEE SHEET No. 37

NOT FOR CONSTRUCTION

ISSUE	DATE	REVISION	PREP	CHECK	AUTH
A	09-08-2021	ISSUED FOR TENDER	SM	LB	PB

LOCAL COUNCIL ROAD — SNOWY VALLEYS COUNCIL

REPLACEMENT OF TOWONG BRIDGE

ON TOWONG RD OVER MURRAY RIVER AT TOWONG

PSC GIRDERS REINFORCEMENT - SHEET D

Cardno
Cardno (NSW/ACT) Pty Ltd | ABN 95 001 145 035
Level 9, The Forum, 203 Pacific Highway
St. Leonards, NSW 2065
Tel: 02 9496 7700 Fax: 02 9439 5170
Web: www.cardno.com.au

SOUTH WEST REGION
NSW GOVERNMENT Transport for NSW

	PREPARED	CHECKED
DESIGN	J.Guzman	L.Bai
DRAWING	A.Javier	S.Mathie
APPROVED/ DESIGN QA RECORDS	P.Boesch	

DIRECTOR

DRAWING SET No. DS2021/000055

BRIDGE No. B12447

ISSUE STATUS PRELIMINARY

ISSUE A | No OF SHEETS 57 | SHEET No 35

CAD No DS2017-002667-DC-BR-2001(05)

THIS DRAWING IS CONFIDENTIAL AND SHALL ONLY BE USED FOR THE PURPOSE OF THE NOMINATED PROJECT

PRODUCED: 25 September 2020 AT 9:17:17 AM USER: Stuart Mathie
FILE PATH: N:\Projects\800\PY186100_PARKES BYPASS\Drawings\Bulid\05_XrfrRMS-A1-SHT.dwg
PLOT DRIVER: NONE
PEN TABLE:----

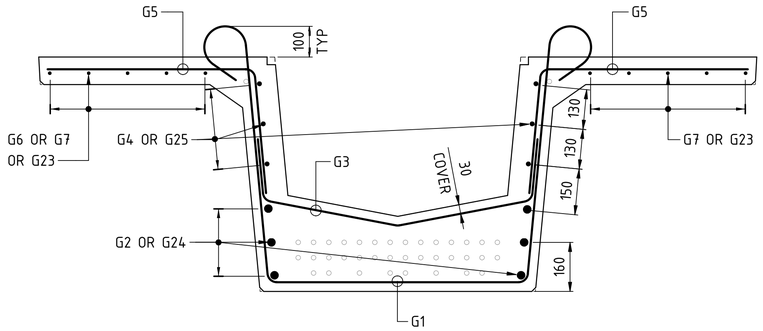

SECTION 1/32 1/33 1/34

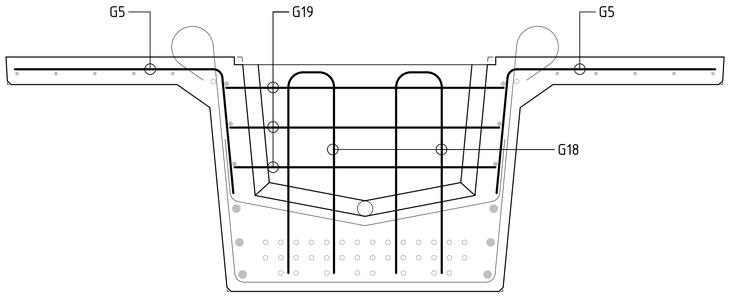

SECTION 2/32 2/33 2/34

FOR UNMARKED REINFORCEMENT SEE SECTION 1/-

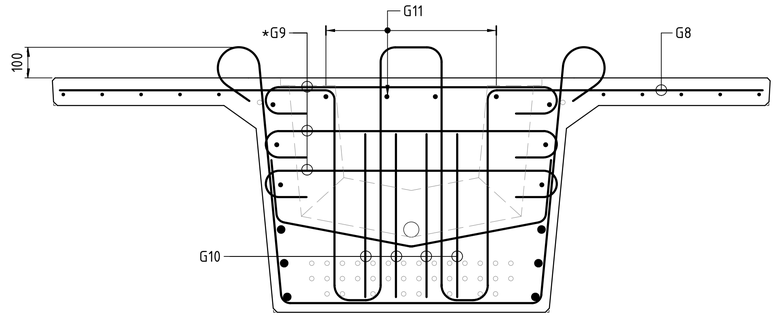

SECTION 3/35

FOR UNMARKED REINFORCEMENT SEE SECTION 1/-

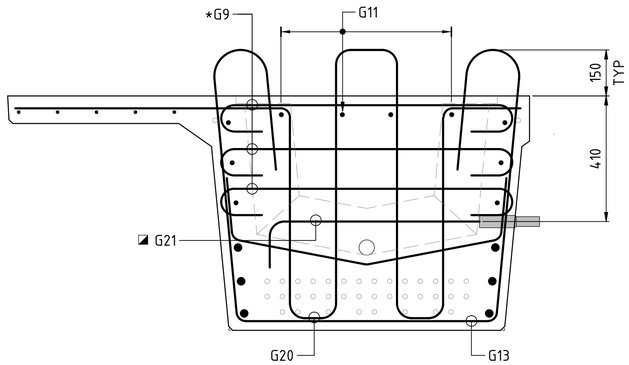

SECTION 6/35

FOR UNMARKED REINFORCEMENT SEE SECTION 1/-

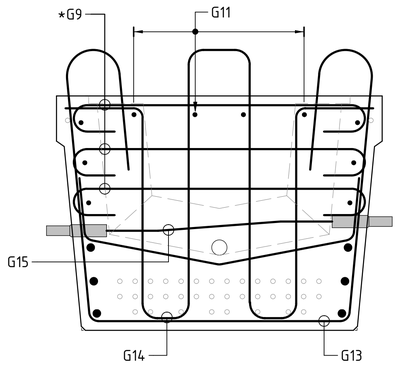

SECTION 7/35

FOR UNMARKED REINFORCEMENT SEE SECTION 1/-

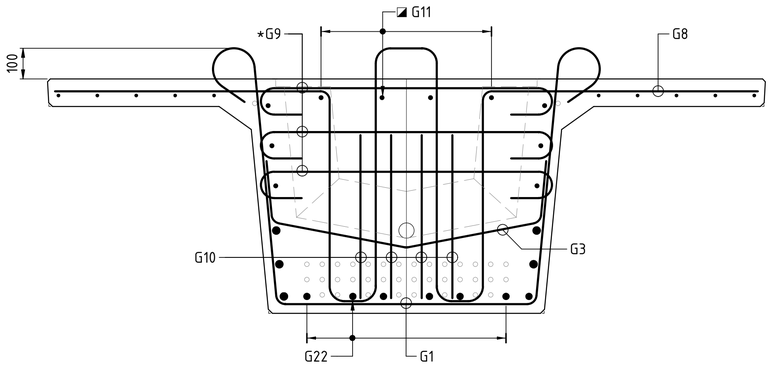

SECTION 8/35

FOR UNMARKED REINFORCEMENT SEE SECTION 1/-

GENERAL NOTES

SCALE 0 200 400 600 800 1000mm OR AS SHOWN

FOR OTHER GENERAL NOTES RELATING TO THIS SHEET, SEE SHEET No. 37

NOT FOR CONSTRUCTION

ISSUE	DATE	REVISION	PREP	CHECK	AUTH
A	09-08-2021	ISSUED FOR TENDER	SM	LB	PB

LOCAL COUNCIL ROAD — SNOWY VALLEYS COUNCIL

REPLACEMENT OF TOWONG BRIDGE

ON TOWONG RD OVER MURRAY RIVER AT TOWONG

PSC GIRDERS REINFORCEMENT - SHEET E

Cardno
Cardno (NSW/ACT) Pty Ltd | ABN 95 001 145 035
Level 9, The Forum, 203 Pacific Highway
St Leonards, NSW 2065
Tel: 02 9496 7700 Fax: 02 9439 5170
Web: www.cardno.com.au

SOUTH WEST REGION
NSW GOVERNMENT Transport for NSW

	PREPARED	CHECKED
DESIGN	J.Guzman	L.Bai
DRAWING	A.Javier	S.Mathie

APPROVED/ DESIGN QA RECORDS P.Boesch
DIRECTOR

DRAWING SET No. DS2021/000055
BRIDGE No. B12447
ISSUE STATUS PRELIMINARY
ISSUE A | No OF SHEETS 57 | SHEET No 36

CAD No DS2017-002667-DC-BR-2001(05)

THIS DRAWING IS CONFIDENTIAL AND SHALL ONLY BE USED FOR THE PURPOSE OF THE NOMINATED PROJECT

PRODUCED: 25 September 2020 AT 9:17:17 AM USER: Stuart Mathie
FILE: P:\21A1_Projects\800\PF181100_PARKES BYPASS\Drawings\Build\05_XrfrRMS-A1-SHT.dwg
PLOT DRIVER: PDF
PEN TABLE: ----

STANDARD BAR SHAPES DIAGRAM

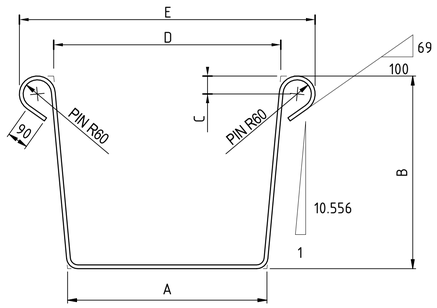

BZ
FITMENT BENDS

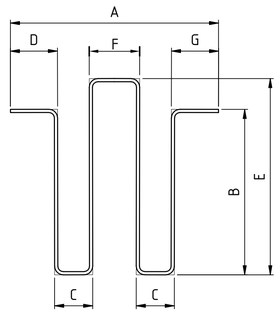

FZ
FITMENT BENDS

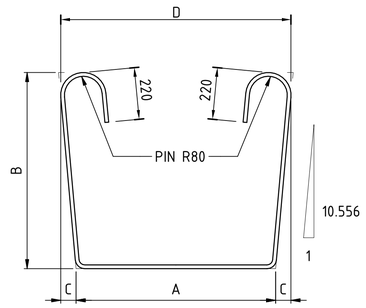

CZ
FITMENT BENDS

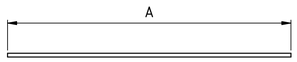

S

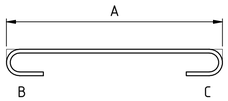

HH

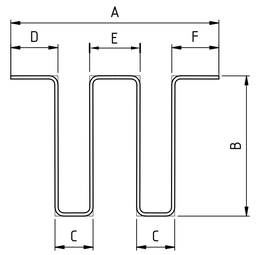

EZ
FITMENT BENDS

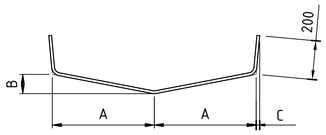

AZ
FITMENT BENDS

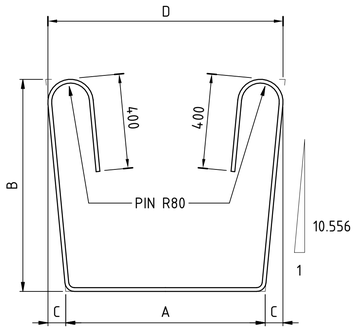

DZ
FITMENT BENDS

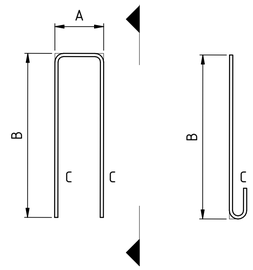

GZ
FITMENT BENDS

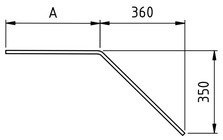

V
FITMENT BENDS

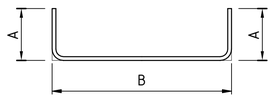

LF
FITMENT BENDS

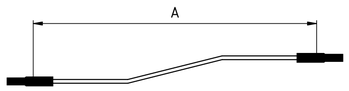

CC ◪

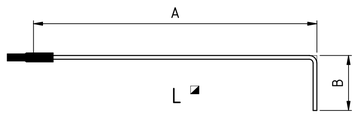

L ◪

BAR MARKING LEGEND

THE METHOD USED TO LABEL REINFORCEMENT ON THE DRAWING IS AS FOLLOWS:

A1 10-N16-S-300EF

- EF — INFORMATION FOR PLACING.
- 300 — SPACE ALONG LIMIT LINE
- S — BAR SHAPE CODE
- N16 — BAR SIZE IN MILLIMETRES
- N — BAR STRUCTURAL PROPERTIES
- 10 — NUMBER OF BARS IN THE SET
- 1 — BAR NUMBER IN SEQUENCE
- A — STRUCTURE ELEMENT DENOTATION

REINFORCEMENT ABBREVIATIONS ON THE DRAWINGS AND NOT DEFINED IN AS/NZS 1100 ARE AS FOLLOWS:

LS DENOTES LAP TO BE STAGGERED

EQ DENOTES EQUAL SPACES OR EQUALLY SPACED.

REINFORCEMENT NOTES

1. AUSTRALAIN STANDARD BAR SHAPES ARE IN ACCORDANCE WITH AS 1100.501.
2. BAR SIZE IS THE NOMINAL DIAMETER IN MILLIMETRES, OR THE AS/NZS 4671 FABRIC NUMBER.
3. THE GRADE OF REINFORCEMENT, IF NOT STATED ON THE DRAWINGS, MUST BE D500N TO AS/NZS 4671.
4. WHERE SHOWN ON THE DRAWINGS, "W" MUST DENOTE PLAIN ROUND REINFORCING BARS EQUIVALENT TO GRADE R500L TO AS/NZS 4671.
5. WHERE SHOWN ON THE DRAWINGS, RL AND SL MUST DENOTE WELDED REINFORCING BAR (RECTANGULAR AND SQUARE), RESPECTIVELY.
6. DIMENIONS SHOWN ON BAR SHAPES DIAGRAM ARE MEASURED FROM THE OUTSIDE FACES OF THE BARS AND ARE IN MILLIMETRES.
7. THE INCLUDED ANGLE OF ANY BEND MUST BE RIGHT ANGLE IF NO DIMENSIONS SHOWN.
8. BARS OF DIAMETER GREATER THAN 24mm MUST NOT BE REBENT.
9. BAR BENDING AND HOOK DETAILS MUST BE IN ACCORDANCE WITH SECTION 5.13 OF AS 5100-BRIDGE DESIGN.

GENERAL NOTES

NOT TO SCALE.

REQUIRED COVER TO REINFORCEMENT NEAREST TO THE CONCRETE SURFACE SHALL BE 30mm UNLESS SPECIFIED OTHERWISE.

UNLESS SHOWN OTHERWISE ON THE DRAWINGS LAPS ON ADJACENT BARS ON ANY FACE SHALL BE STAGGERED (OFFSET) BY NO LESS THAN THE LENGTH OF LAP.

UNLESS OTHERWISE SPECIFIED, THE MINIMUM DEVELOPMENT LENGTHS AND LENGTHS OF LAPS SHALL BE AS FOLLOWS:

BAR SIZE:	N12	N16	N20	N24	N28	N32
a) LAP LENGTH - HORIZONTAL BARS WITH >300mm OF CONCRETE CAST BELOW THE BAR	500	750	1000	1300	1625	2000
b) LAP LENGTH - OTHER BARS:	350	550	800	1000	1250	1525
c) DEVELOPMENT LENGTH:	350	500	650	800	1050	1200

* DENOTES VARIABLE LENGTH BAR.

◪ DENOTES BAR WITH MECHANICAL COUPLER.

NOT FOR CONSTRUCTION

ISSUE	DATE	REVISION	PREP	CHECK	AUTH
A	09-08-2021	ISSUED FOR TENDER	SM	LB	PB

LOCAL COUNCIL ROAD — SNOWY VALLEYS COUNCIL

REPLACEMENT OF TOWONG BRIDGE

ON TOWONG RD OVER MURRAY RIVER AT TOWONG

PSC GIRDERS REINFORCEMENT - SHEET F

Cardno (NSW/ACT) Pty Ltd | ABN 95 001 145 035
Level 9, The Forum, 203 Pacific Highway
St Leonards, NSW 2065
Tel: 02 9496 7700 Fax: 02 9439 5170
Web: www.cardno.com.au

SOUTH WEST REGION

NSW GOVERNMENT — Transport for NSW

	PREPARED	CHECKED
DESIGN	J.Guzman	L.Bai
DRAWING	A.Javier	S.Mathie
APPROVED/ DESIGN QA RECORDS	P.Boesch	

DIRECTOR

DRAWING SET No. DS2021/000055

BRIDGE No. B12447

ISSUE STATUS PRELIMINARY

ISSUE A | No OF SHEETS 57 | SHEET No 37

CAD No DS2017-002667-DC-BR-2001(05)

THIS DRAWING IS CONFIDENTIAL AND SHALL ONLY BE USED FOR THE PURPOSE OF THE NOMINATED PROJECT

PRODUCED: 25 September 2020 AT 9:17:17 AM USER: Stuart Mathie
FILE FORMAT: Version 1800/PT18\100_PARKES BYPASS\Drawings\Build\05_XrfRNS-A1-SHT.dwg
PLOT DRIVER: NONE
PEN TABLE: -----

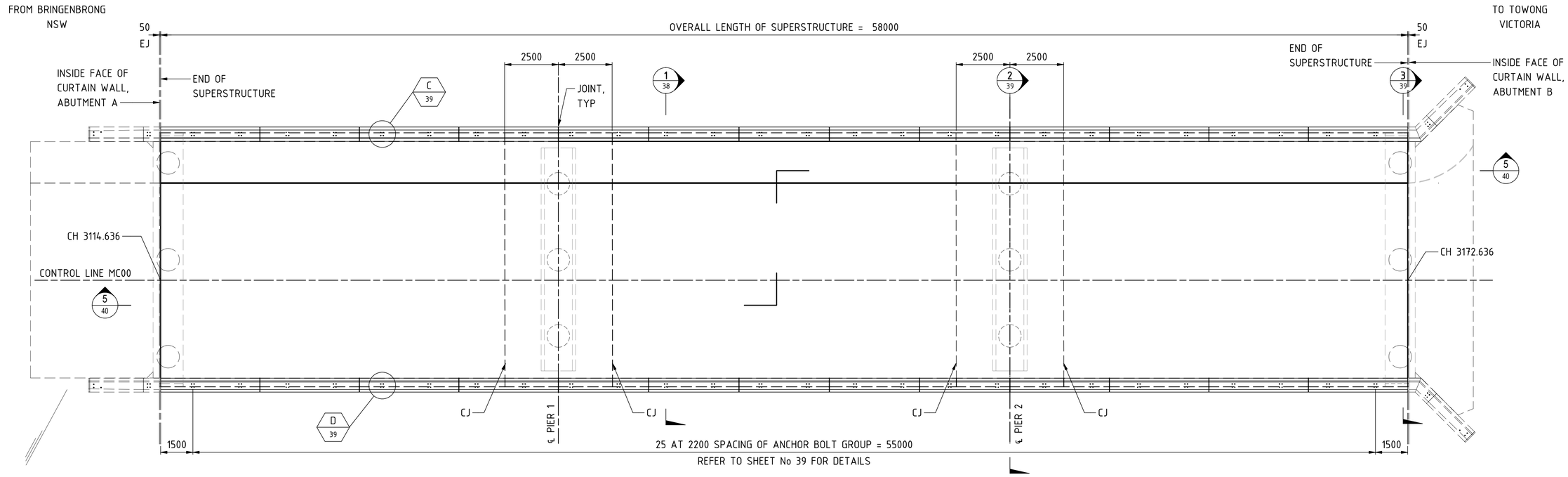

PLAN

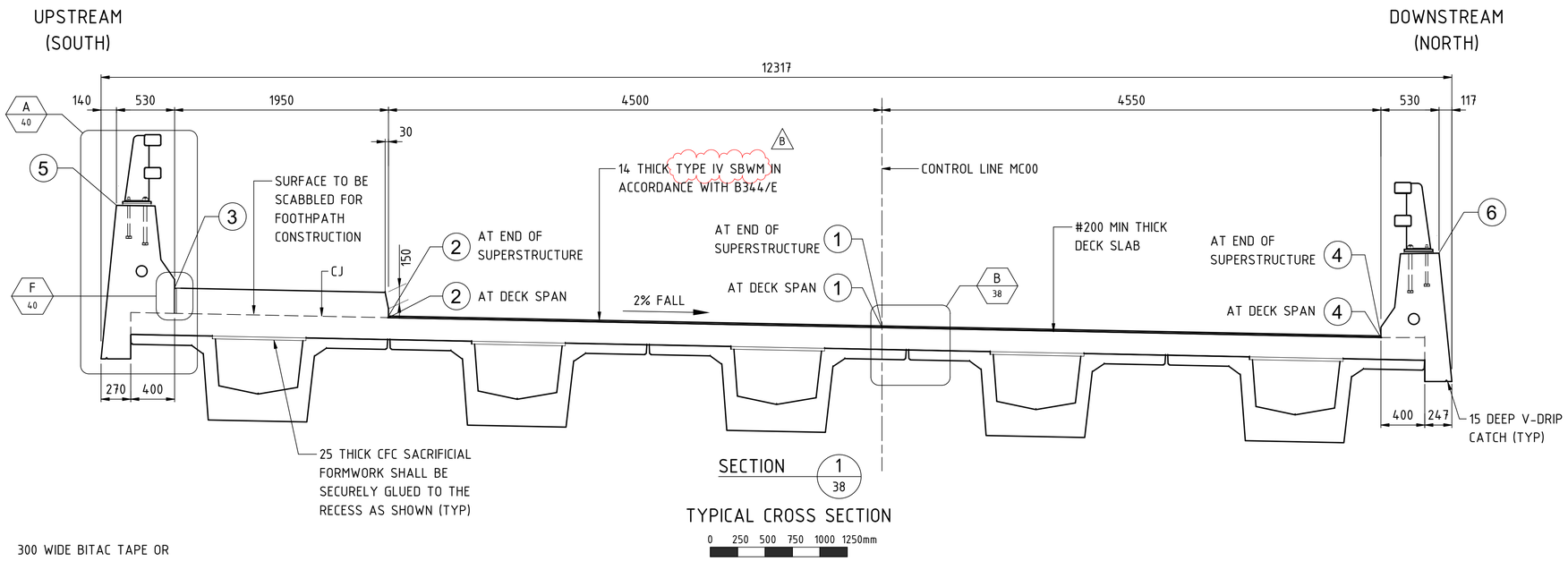

TYPICAL CROSS SECTION

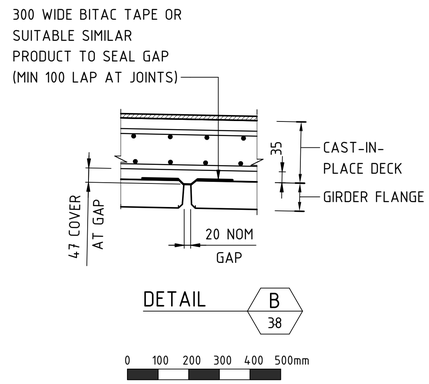

DETAIL B 38

TABLE 1 - DECK SETOUT

LOCATION	CHAINAGE 'X'	COORDINATES		POINT 1 RL	POINT 2 RL	POINT 3 RL	POINT 4 RL	POINT 5 RL	POINT 6 RL
		EASTING	NORTHING						
END OF DECK, ABUTMENT A	3114.636	589691.397	6001853.204	253.488	253.578	253.833	253.397	254.588	254.152
	3122.636	589684.368	6001849.382	253.903	253.993	254.262	253.812	255.017	254.581
CJ	3130.636	589677.340	6001845.560	254.333	254.423	254.692	254.242	255.447	255.011
℄ PIER 1	3133.136	589675.144	6001844.366	254.467	254.557	254.826	254.376	255.581	255.145
CJ	3135.636	589672.948	6001843.171	254.601	254.691	254.960	254.510	255.715	255.279
	3143.636	589665.920	6001839.349	255.030	255.120	255.389	254.939	256.144	255.708
CJ	3151.636	589658.892	6001835.528	255.459	255.549	255.818	255.368	256.573	256.137
℄ PIER 2	3154.136	589656.695	6001834.333	255.593	255.683	255.952	255.502	256.707	256.271
CJ	3156.636	589654.499	6001833.139	255.727	255.817	256.086	255.636	256.841	256.405
	3164.636	589647.471	6001829.317	256.157	256.247	256.516	256.066	257.271	256.835
END OF DECK, ABUTMENT B	3172.636	589640.443	6001825.495	256.600	256.690	256.945	256.509	257.700	257.264

ALL RL'S ARE TO TOP OF RC DECK SLAB

GENERAL NOTES

SCALE 0 2000 4000 6000 8000 10000m OR AS SHOWN

# DENOTES NOMINAL DIMENSIONS AT MID-SPAN. VARIES ELSEWHERE DUE TO GIRDERS HOG OF 31. IF HOG EXCEEDS 31mm INCREASE DECK THICKNESS TO PROVIDE A MINIMUM DEPTH OF CONCRETE OVER MIDSPAN OF 200mm. REFER TO SHEET No. 25 FOR NOTES ON GIRDER HOG.
FOR OTHER GENERAL NOTES RELATING TO THIS SHEET, SEE SHEET No. 39.

NOT FOR CONSTRUCTION

ISSUE	DATE	REVISION	PREP	CHECK	AUTH
B	19-08-2021	ISSUED FOR TENDER	SM	LB	PB
A	09-08-2021	ISSUED FOR TENDER	SM	LB	PB

LOCAL COUNCIL ROAD — SNOWY VALLEYS COUNCIL

REPLACEMENT OF TOWONG BRIDGE

ON TOWONG RD OVER MURRAY RIVER AT TOWONG

DECK CONCRETE - SHEET A

Cardno®
Level 3, The Forum, 203 Pacific Highway St. Leonards, NSW 2065
Tel: 02 9496 7700 Fax: 02 9439 5170
Web: www.cardno.com.au

SOUTH WEST REGION
NSW GOVERNMENT Transport for NSW

	PREPARED	CHECKED
DESIGN	J.Guzman	L.Bai
DRAWING	A.Javier	S.Mathie

APPROVED/ DESIGN QA RECORDS P.Boesch
DIRECTOR

DRAWING SET No. DS2021/000055
BRIDGE No. B12447
ISSUE STATUS PRELIMINARY
ISSUE B | No OF SHEETS 57 | SHEET No 38

CAD No DS2017-002667-DC-BR-2001(05)

THIS DRAWING IS CONFIDENTIAL AND SHALL ONLY BE USED FOR THE PURPOSE OF THE NOMINATED PROJECT

PRODUCED: 25 September 2020 AT 9:17:17 AM USER: Stuart Mathie
FILE FORMAT: Version 8800/PT18100_PARKES BYPASS\Drawings\Build\05_XrfRNS-A1-SHT.dwg
PLOT DRIVER: NONE
PEN TABLE: ----

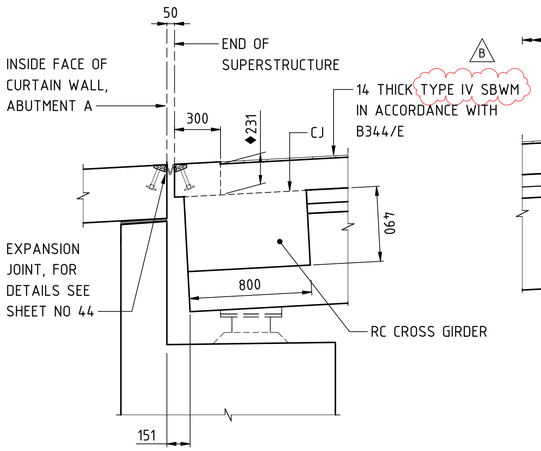

ABUTMENT A SHOWN,
ABUTMENT B SIMILAR
(SECTION ALONG CARRIAGEWAY)

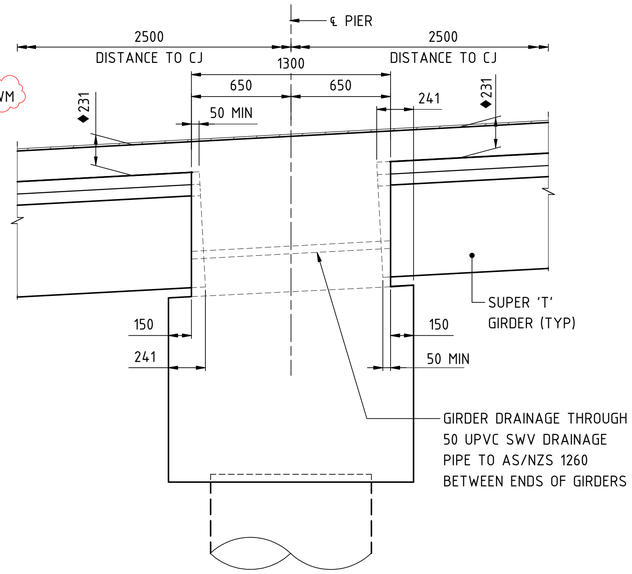

PIER 1 SHOWN, PIER 2 SIMILAR
(SECTION ALONG CARRIAGEWAY)

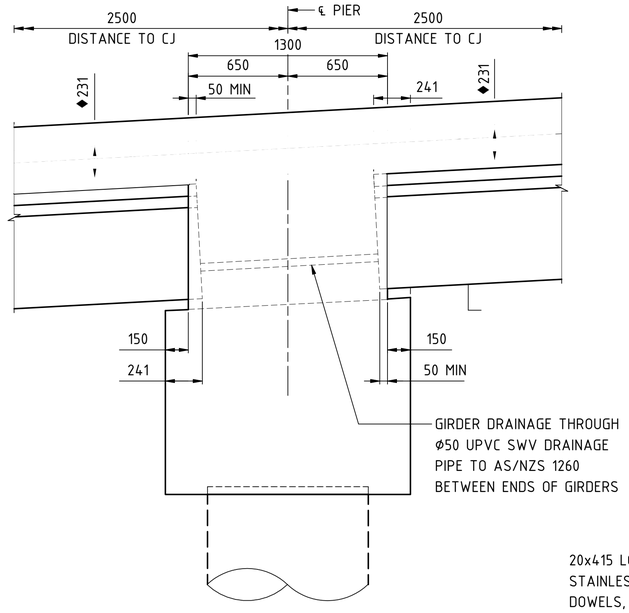

PIER 2 SHOWN, PIER 1 SIMILAR
(SECTION ALONG FOOTWAY)

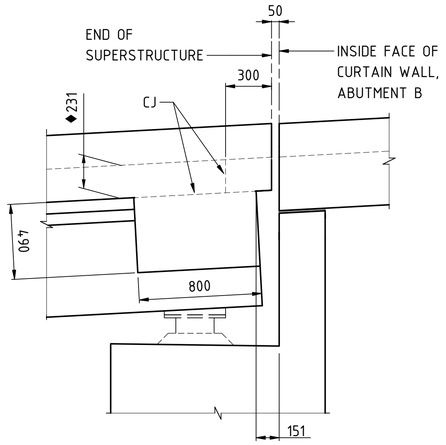

ABUTMENT B SHOWN,
ABUTMENT A SIMILAR
(SECTION ALONG FOOTWAY)

SECTION 5 / 38

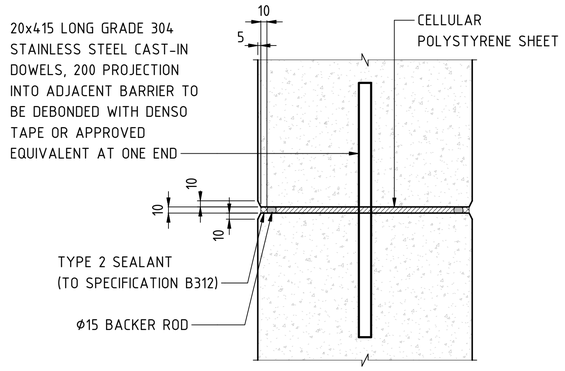

SECTION 6 / -

0 50 100 150 200 250mm

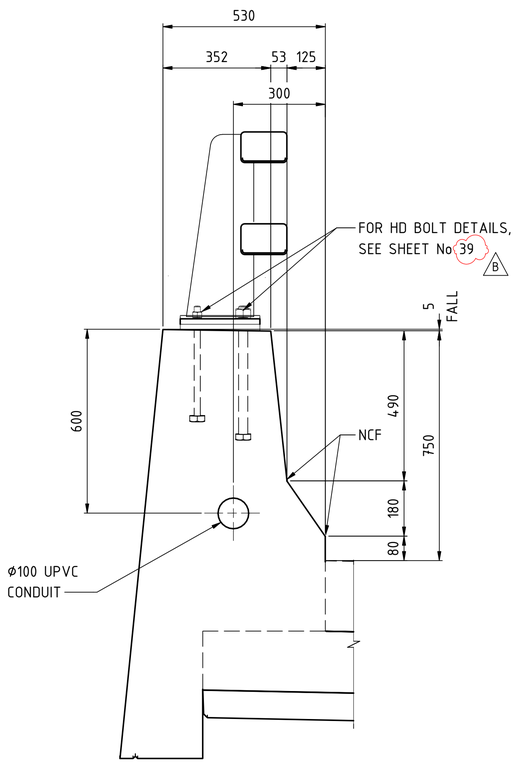

DETAIL A / 38

UPSTREAM SHOWN,
DOWNSTREAM SIMILAR

0 100 200 300 400 500mm

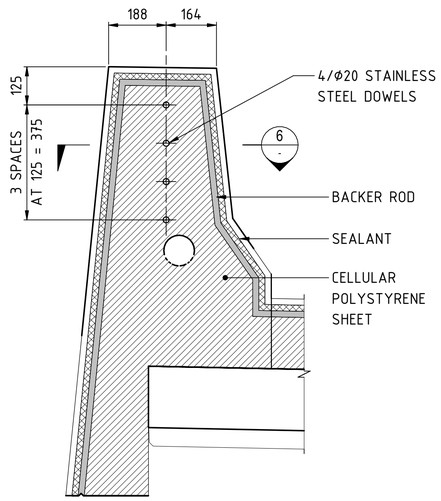

TYPICAL SECTION AT UPSTREAM
TRAFFIC BARRIER JOINT

0 100 200 300 400 500mm

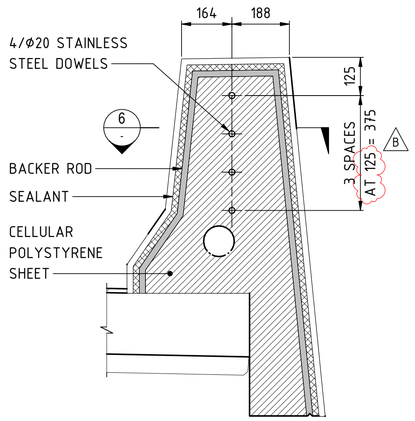

TYPICAL SECTION AT DOWNSTREAM
TRAFFIC BARRIER JOINT

0 100 200 300 400 500mm

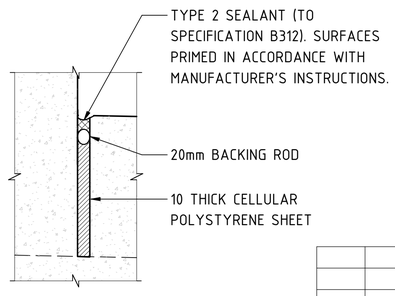

DETAIL F / 39

0 50 100 150 200 250mm

GENERAL NOTES

SCALE 0 0.4 0.8 1.2 1.6 2m AS SHOWN

♦ DENOTES NOMINAL DIMENSIONS AT SPAN ENDS. VARIES ELSEWHERE DUE TO HOG OF 31. IF HOG EXCEEDS 31mm INCREASE DECK THICKNESS TO PROVIDE A MINIMUM DEPTH OF CONCRETE OVER MIDSPAN OF 200mm. REFER TO SHEET No 25 FOR NOTES ON HOG.
FOR OTHER GENERAL NOTES RELATING TO THIS SHEET, SEE SHEET No. 39

NOT FOR CONSTRUCTION

ISSUE	DATE	REVISION	PREP	CHECK	AUTH
B	19-08-2021	ISSUED FOR TENDER	SM	LB	PB
A	09-08-2021	ISSUED FOR TENDER	SM	LB	PB

LOCAL COUNCIL ROAD — SNOWY VALLEYS COUNCIL

REPLACEMENT OF TOWONG BRIDGE

ON TOWONG RD OVER MURRAY RIVER AT TOWONG

DECK CONCRETE - SHEET C

Cardno
Cardno (NSW/ACT) Pty Ltd | ABN 95 001 145 035
Level 9, The Forum, 203 Pacific Highway
St. Leonards, NSW 2065
Tel: 02 9496 7700 Fax: 02 9439 5170
Web: www.cardno.com.au

SOUTH WEST REGION
NSW GOVERNMENT Transport for NSW

	PREPARED	CHECKED
DESIGN	J.Guzman	L.Bai
DRAWING	A.Javier	S.Mathie
APPROVED/ DESIGN QA RECORDS	P.Boesch	
	DIRECTOR	

DRAWING SET No. DS2021/000055
BRIDGE No. B12447
ISSUE STATUS PRELIMINARY
ISSUE B | No OF SHEETS 57 | SHEET No 40

CAD No DS2017-002667-DC-BR-2001(05)

THIS DRAWING IS CONFIDENTIAL AND SHALL ONLY BE USED FOR THE PURPOSE OF THE NOMINATED PROJECT

PRODUCED: 25 September 2020 AT 9:17:17 AM USER: Stuart Mathie
FILE PATH: \\Mpwpfs\ab600\PY\B100_PARKES B BYPASS\Drawings\Build\05_X\RMS-A1-SHT.dwg
PLOT DRIVER: NONE
PEN TABLE: ----

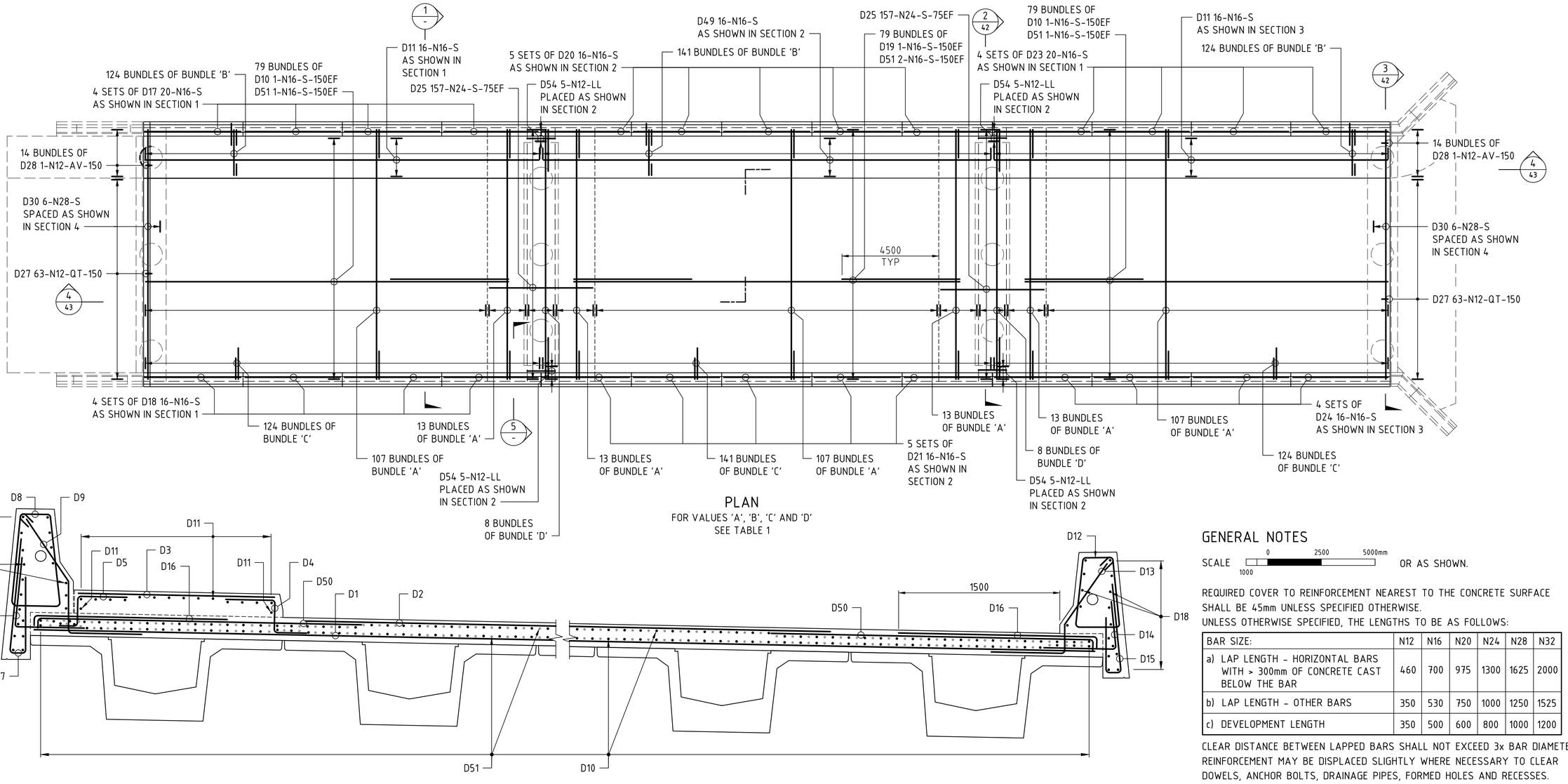

PLAN

FOR VALUES 'A', 'B', 'C' AND 'D' SEE TABLE 1

SECTION 1

SPAN 1 SHOWN, SPAN 2 AND 3 SIMILAR

0 500 1000mm

200

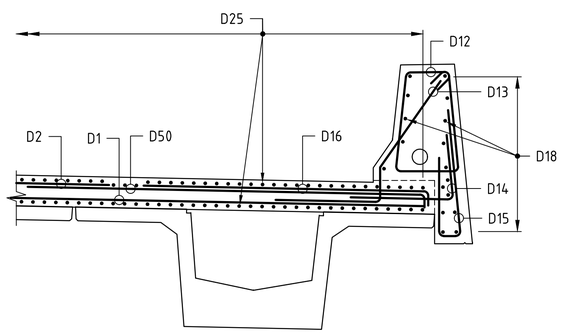

SECTION 5

0 500 1000mm

200

TABLE 1 - BUNDLE DATA

VALUES	BUNDLES CONSIST OF
BUNDLE 'A'	D1 1-N16-S-150FF D2 1-N16-S-150NF D50 2-N16-L-150NF D16 2-N16-L-150NF
BUNDLE 'B'	D3 1-N16-S-150NF D4 1-N16-RC-150NF D5 1-N16-RC-150NF D6 1-N16-A-150 D7 1-N16-KF-150 D8 1-N16-QT-150 D9 1-N16-KL-150
BUNDLE 'C'	D12 1-N16-QT-150 D13 1-N16-KL-150 D14 1-N16-A-150 D15 1-N16-KF-150
BUNDLE 'D'	D47 2-N20-VV-150 D48 2-N20-AV-150 D32 2-N16-L-150NF D39 1-N28-S-150NF

GENERAL NOTES

SCALE 0 2500 5000mm / 1000 OR AS SHOWN.

REQUIRED COVER TO REINFORCEMENT NEAREST TO THE CONCRETE SURFACE SHALL BE 45mm UNLESS SPECIFIED OTHERWISE.
UNLESS OTHERWISE SPECIFIED, THE LENGTHS TO BE AS FOLLOWS:

BAR SIZE:	N12	N16	N20	N24	N28	N32
a) LAP LENGTH - HORIZONTAL BARS WITH > 300mm OF CONCRETE CAST BELOW THE BAR	460	700	975	1300	1625	2000
b) LAP LENGTH - OTHER BARS	350	530	750	1000	1250	1525
c) DEVELOPMENT LENGTH	350	500	600	800	1000	1200

CLEAR DISTANCE BETWEEN LAPPED BARS SHALL NOT EXCEED 3x BAR DIAMETER.
REINFORCEMENT MAY BE DISPLACED SLIGHTLY WHERE NECESSARY TO CLEAR DOWELS, ANCHOR BOLTS, DRAINAGE PIPES, FORMED HOLES AND RECESSES.
* DENOTES VARIABLE LENGTH BAR.
◪ DENOTES BAR WITH MECHANICAL COUPLER.

NOT FOR CONSTRUCTION

ISSUE	DATE	REVISION	PREP	CHECK	AUTH
A	09-08-2021	ISSUED FOR TENDER	SM	LB	PB

LR7000 - TOWONG ROAD — SNOWY VALLEYS COUNCIL

REPLACEMENT OF TOWONG BRIDGE

ON TOWONG RD OVER MURRAY RIVER AT TOWONG

DECK REINFORCEMENT - SHEET A

Cardno (NSW/ACT) Pty Ltd | ABN 95 001 145 035
Level 9, The Forum, 203 Pacific Highway
St Leonards, NSW 2065
Tel: 02 9496 7700 Fax: 02 9439 5170
Web: www.cardno.com.au

SOUTHWEST REGION

	PREPARED	CHECKED
DESIGN	J.Guzman	L.Bai
DRAWING	A.Javier	S.Mathie
APPROVED/ DESIGN QA RECORDS	P.Boesch	
	DIRECTOR	

DRAWING SET No DS2021/000055

BRIDGE No BR12447

ISSUE STATUS: PRELIMINARY

ISSUE A — No OF SHEETS 57 — SHEET No 41

THIS DRAWING IS CONFIDENTIAL AND SHALL ONLY BE USED FOR THE PURPOSE OF THE NOMINATED PROJECT

DATE PLOTTED: 09/08/2021 11:07:01 AM
FILE PATH: BIM 360://B0021046 Towong Bridge/B0021046-MOD-BR-TOWONG BRIDGE_v2020.rvt
PLOT DRIVER: NONE
PEN TABLE: ----

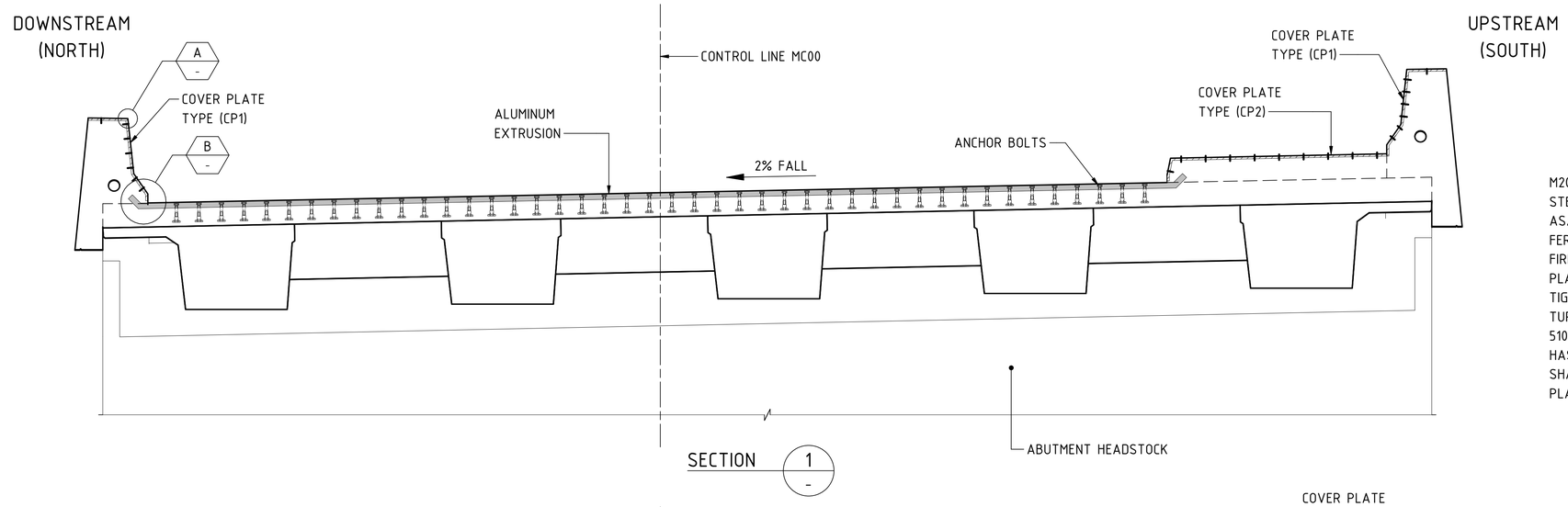

SECTION 1 -

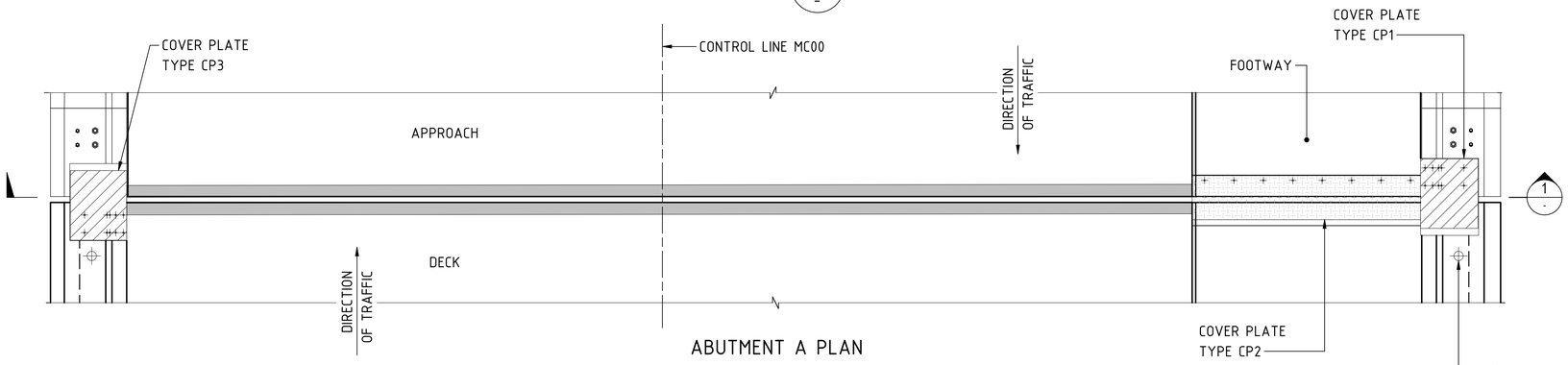

ABUTMENT A PLAN

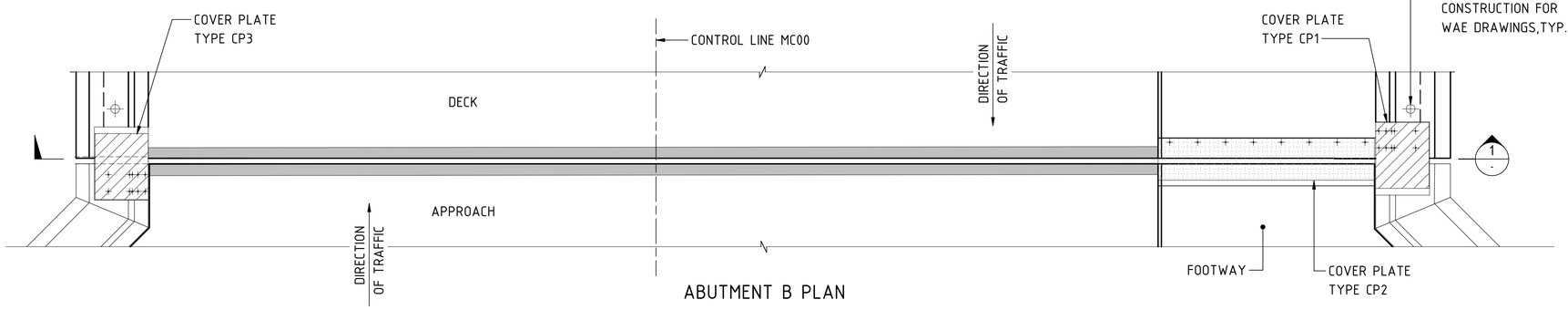

ABUTMENT B PLAN

SECTION 2 -

STRIP SEAL TYPE EXPANSION JOINT ULTIMATE PERFORMANCE REQUIREMENTS:

INSTALLATION GAP WIDTH AT 20°C = 38mm
MINIMUM GAP WIDTH = 5mm
MAXIMUM GAP WIDTH = 85mm

0 100 200 300 400 500mm

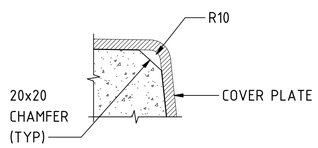

DETAIL A -

0 30 60 90 120 150mm

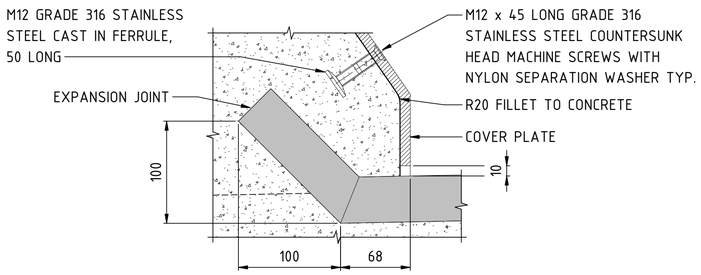

DETAIL B -

0 30 60 90 120 150mm

GENERAL NOTES

SCALE 0 500 1000 1500 2000 2500mm OR AS SHOWN.

SEAL ELEMENT TO BE INSTALLED IN TWO LENGTHS WITH STAGING.
GRADE 250 STEEL PLATES SHALL CONFORM TO AS/NZS 3678 AND REQUIREMENTS OF TfNSW B201.
ALL COMPONENTS, EXCEPT STAINLESS STEEL ITEMS, MUST BE HOT-DIP GALVANIZED AFTER FABRICATION IN CONFORMITY TO TfNSW SPECIFICATION B201 UNLESS SPECIFIED OTHERWISE.
COUNTERSUNK HEAD MACHINE SCREWS AND CAST IN FERRULES MUST BE OF GRADE 316 STAINLESS STEEL.
EDGES TO PROTECTIVE TREATED SHALL BE ROUNDED TO A RADIUS OF 1.5mm UNLESS SPECIFIED OTHERWISE.
# DENOTES NOMINAL DIMENSION AT 20° C.
THE CALCULATED TEMPERATURE MOVEMENT OF THE JOINT GAP IS APPROXIMATELY ±0.4mm AT ABUTMENT A AND 0.4mm AT ABUTMENT B PER ±1°C AT EACH EXPANSION JOINT.
JOINTS SHALL BE INSTALLED STRICTLY IN ACCORDANCE WITH MANUFACTURER'S INSTRUCTIONS.
THE CAST-IN SOCKETS FOR THE COVER PLATES SHALL BE HELD IN POSITION DURING THE PLACING OF THE CONCRETE BY THE COVER PLATES THEMSELVES OR EQUIVALENT TEMPLATE.

NOT FOR CONSTRUCTION

ISSUE	DATE	REVISION	PREP	CHECK	AUTH
A	09-08-2021	ISSUED FOR TENDER	SM	LB	PB

LOCAL COUNCIL ROAD — SNOWY VALLEYS COUNCIL

REPLACEMENT OF TOWONG BRIDGE

ON TOWONG RD OVER MURRAY RIVER AT TOWONG

DECK JOINTS AND COVER PLATES - SHEET A

Cardno (NSW/ACT) Pty Ltd | ABN 95 001 145 035
Level 9, The Forum, 203 Pacific Highway
St. Leonards, NSW 2065
Tel: 02 9496 7700. Fax: 02 9439 5170
Web: www.cardno.com.au

SOUTH WEST REGION

	PREPARED	CHECKED		
DESIGN	J.Guzman	L.Bai	DRAWING SET No.	DS2021/000055
DRAWING	A.Javier	S.Mathie	BRIDGE No.	B12447
APPROVED/ DESIGN QA RECORDS	P.Boesch		ISSUE STATUS	PRELIMINARY
DIRECTOR			ISSUE A / No OF SHEETS 57	SHEET No 44

CAD No DS2017-002667-DC-BR-2001(05)

THIS DRAWING IS CONFIDENTIAL AND SHALL ONLY BE USED FOR THE PURPOSE OF THE NOMINATED PROJECT

PRODUCED: 25 September 2020 AT 9:17:17 AM USER: Stuart Mathie
FILE: DS2017-002667-DC-BR-2001(05)_PARKES BYPASS\Drawings\Build\05_Xrf\RMS-A1-SHT.dwg
PLOT DRIVER: NONE
PEN TABLE: ----

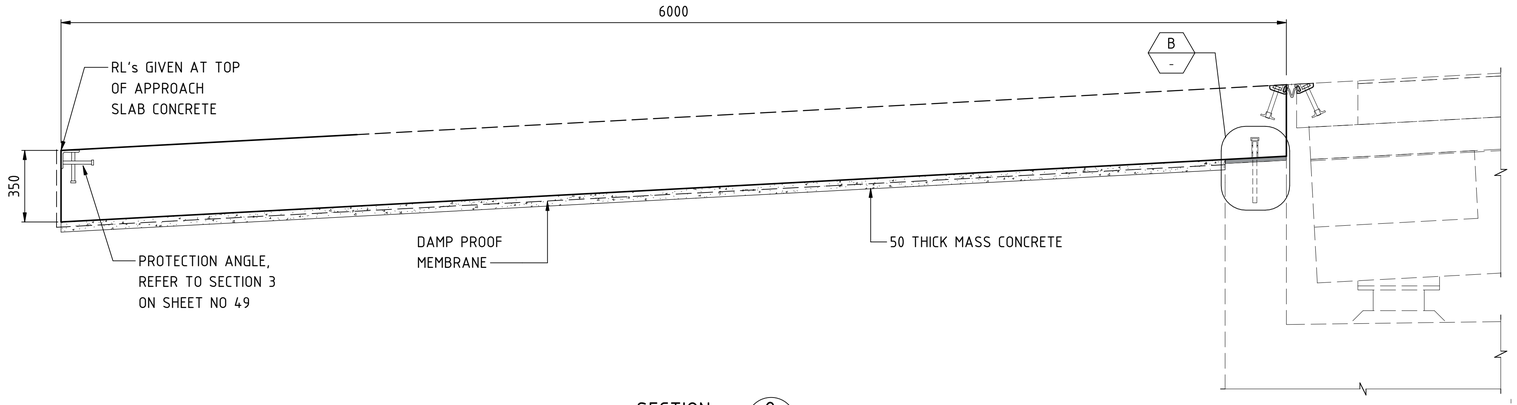

SECTION 2 / 49

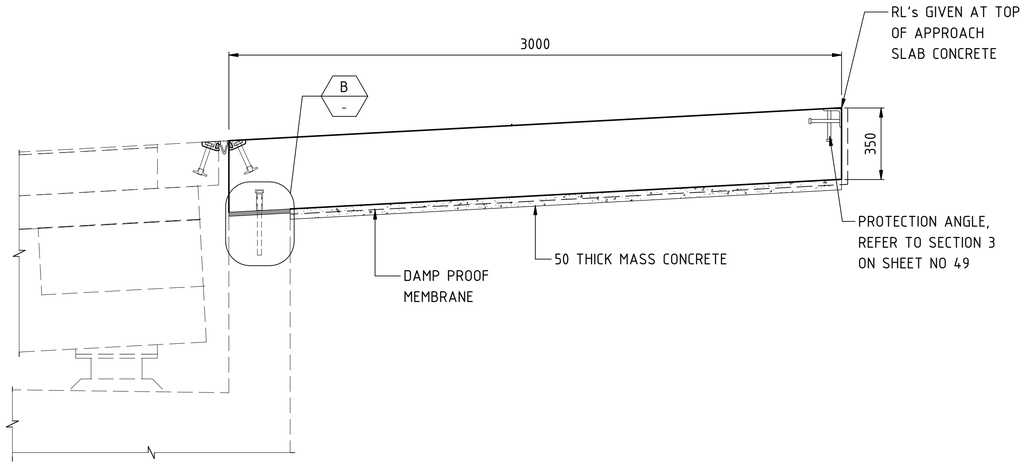

SECTION 3 / 49

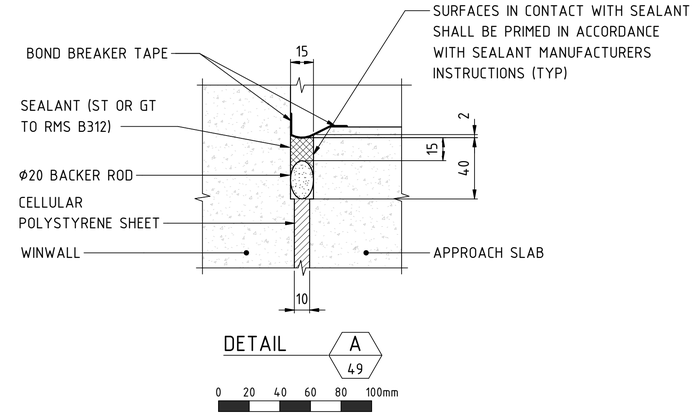

DETAIL A / 49

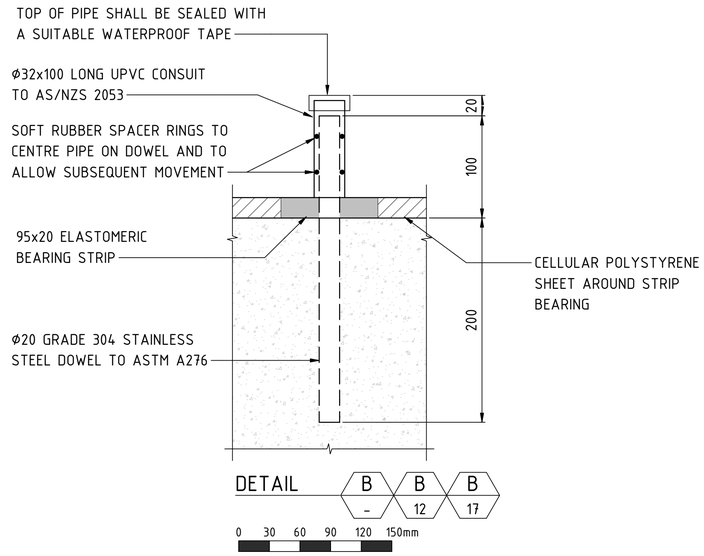

DETAIL B / - B / 12 B / 17

GENERAL NOTES

SCALE 0 300 600 900 1200 1500mm OR AS SHOWN

FOR OTHER GENERAL NOTES RELATING TO THIS SHEET, SEE SHEET No. 49

NOT FOR CONSTRUCTION

ISSUE	DATE	REVISION	PREP	CHECK	AUTH
A	09-08-2021	ISSUED FOR TENDER	SM	LB	PB

LOCAL COUNCIL ROAD — SNOWY VALLEYS COUNCIL

REPLACEMENT OF TOWONG BRIDGE

ON TOWONG RD OVER MURRAY RIVER AT TOWONG

APPROACH SLAB CONCRETE - SHEET B

Cardno
Cardno (NSW/ACT) Pty Ltd | ABN 95 001 145 035
Level 9, The Forum, 203 Pacific Highway
St. Leonards, NSW 2065
Tel: 02 9496 7700 Fax: 02 9439 5170
Web: www.cardno.com.au

SOUTH WEST REGION
NSW GOVERNMENT Transport for NSW

	PREPARED	CHECKED
DESIGN	J.Guzman	L.Bai
DRAWING	A.Javier	S.Mathie

APPROVED/ DESIGN QA RECORDS P.Boesch
DIRECTOR

DRAWING SET No. DS2021/000055
BRIDGE No. B12447
ISSUE STATUS PRELIMINARY
ISSUE A | No OF SHEETS 57 | SHEET No 50

CAD No DS2017-002667-DC-BR-2001(05)

THIS DRAWING IS CONFIDENTIAL AND SHALL ONLY BE USED FOR THE PURPOSE OF THE NOMINATED PROJECT

PRODUCED: 25 September 2020 AT 9:17:17 AM USER: Stuart Mathie
FILE: D:\Temp\AutoRecover\Project800\DF118\100_PARKES BYPASS\Drawings\Build\05_XrfRMS-A1-SHT.dwg
PLOT DRIVER: NONE
PEN TABLE: ----

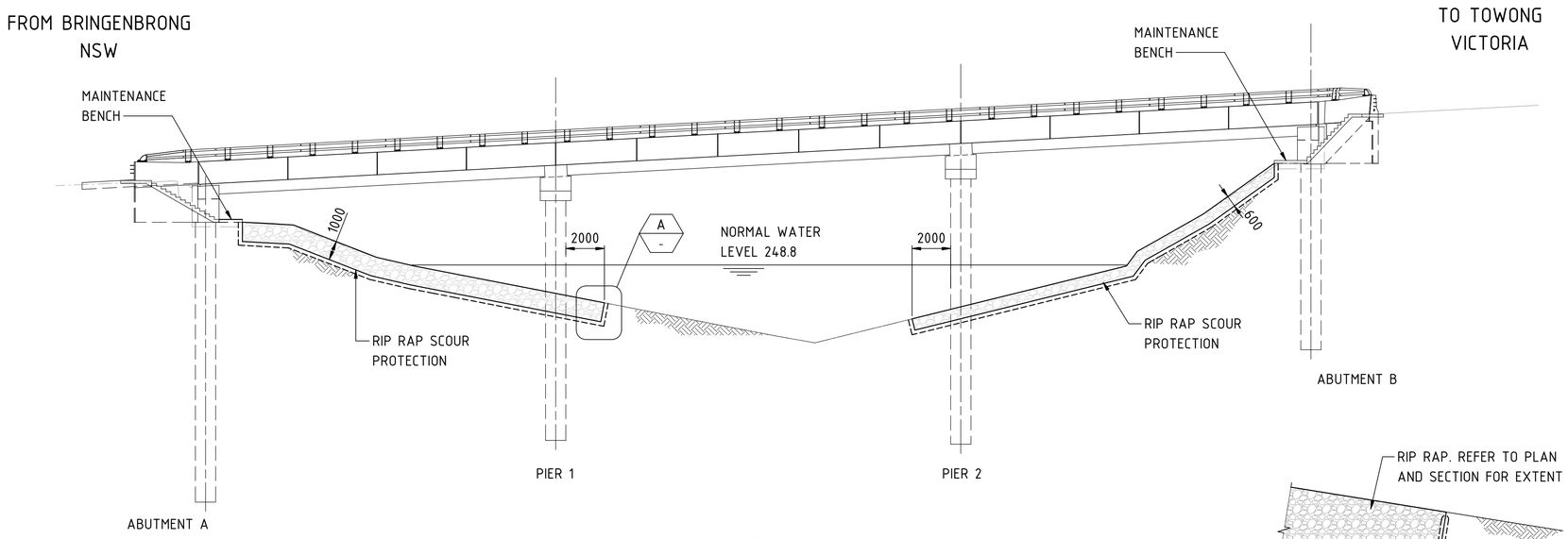

ELEVATION

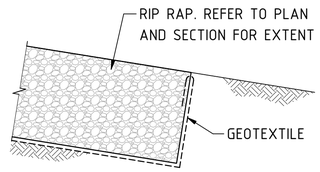

DETAIL A

0 500 1000 1500 2000 2500mm

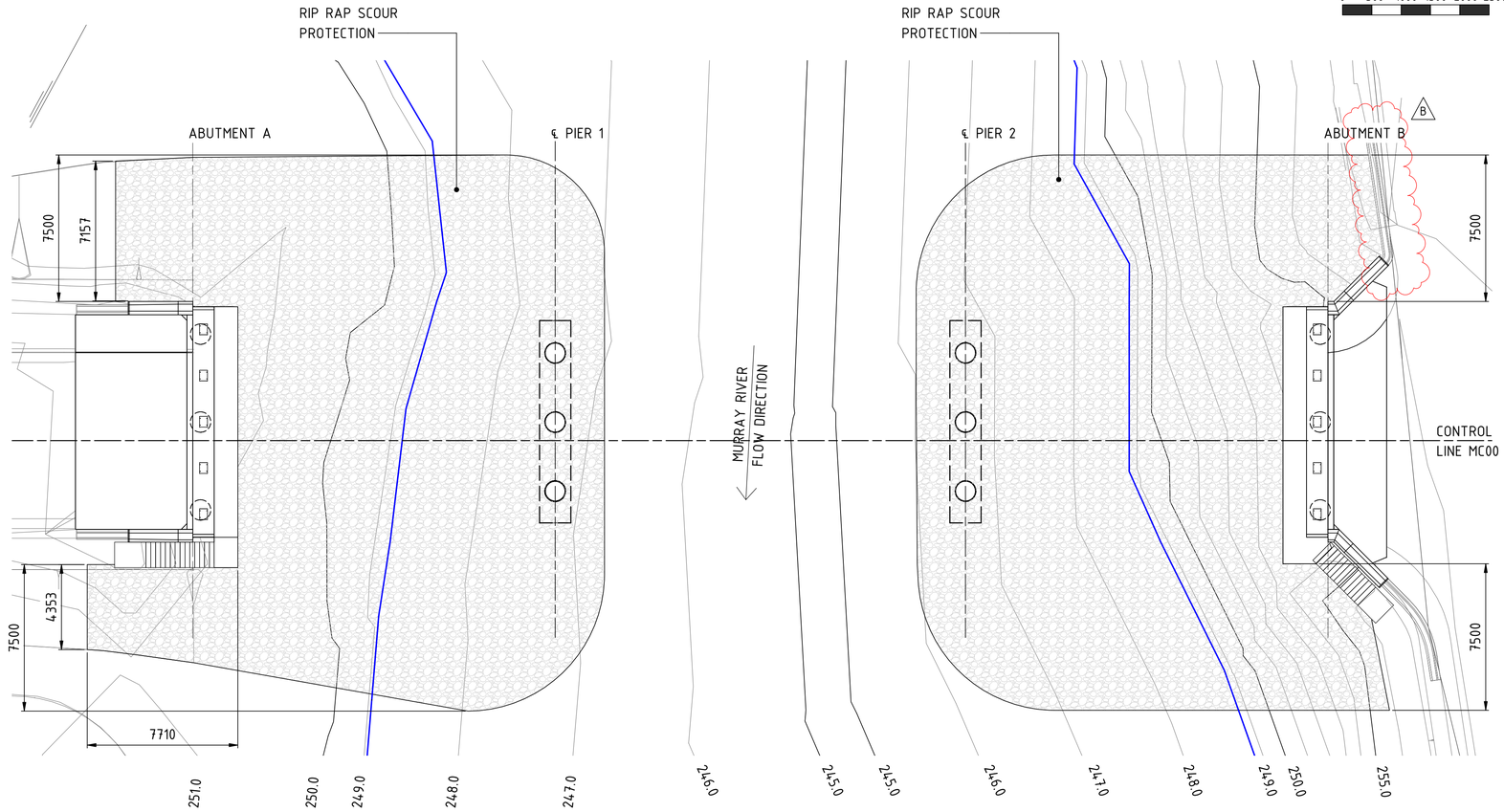

PLAN

GENERAL NOTES

SCALE 0 3 6 9 12 15m OR AS SHOWN.

ALL DIMENSIONS ARE IN MILLIMETRES UNLESS NOTED OTHERWISE.

SCOUR PROTECTION

ROCK USED MUST COMPLY WITH THESE NOTES AND THE DRAWINGS. THE REQUIREMENT APPLIES TO BOTH IMPORTED ROCK AND IN-SITU ROCK WHICH IS RE-USED.

ROCK SHALL BE CLEAN, HARD, DENSE AND DURABLE IGNEOUS OR METAMORPHIC ROCKS. IN ADDITION, IT SHALL BE RESISTANT TO WEATHERING, FREE FROM OVERBURDEN, SPOIL, SHALE AND ORGANIC MATTER. ROCK THAT IS LAMINATED, FRACTURED, POROUS, WITH DISCONTINUITIES OR OTHERWISE PHYSICALLY WEAK, SHALL NOT BE USED. SEDIMENTARY ROCKS SHALL NOT BE USED.

THE BREADTH OR THICKNESS OF A SINGLE STONE SHALL BE NOT LESS THAN ONE-THIRD ITS LENGTH.

GRADATION OF ROCK USED FOR RIP RAP SHALL BE AS SHOWN IN TABLE 1.

ROCK RIP RAP SHALL HAVE A MINIMUM SPECIFIC GRAVITY OF 2.6, A MINIMUM POINT LOAD STRENGTH INDEX $I_{S(50)}$ OF 1 MPa AND A MAXIMUM WET/DRY STRENGTH VARIATION OF 35%.

ROCK SHALL BE WEDGED AND LOCKED TOGETHER SUCH THAT THEY DO NOT MOVE.

ROCK PROTECTION SHALL HAVE A UNIFORM APPEARANCE OVERALL, AND SHALL NOT HAVE NOTICEABLE OVERALL IRREGULARITIES IN HORIZONTAL AND VERTICAL ALIGNMENTS. TOP OF ROCK PROTECTION SHALL BE AT THE DESIGN FINISHED SURFACE LEVEL AND/OR TO MATCH THE EXISTING SURFACE LEVEL AS APPROPRIATE.

ROCK PROTECTION SHALL BE PLACED IN A MANNER WHICH ENSURES THAT THE LARGER ROCKS ARE UNIFORMLY DISTRIBUTED THROUGHOUT THE PROTECTION WORK, AND THAT THE SMALLER ROCKS EFFECTIVELY FILL THE SPACES BETWEEN THE LARGE ROCKS WITHOUT LEAVING ANY LARGE VOIDS. THE LAYERS OF PLACED ROCK SHALL BE OF EVEN THICKNESS AND OF EVEN GRADING.

ROCK SHALL NOT BE ROLLED OR DROPPED INTO POSITION FROM A HEIGHT GREATER THAN 0.75m. IT SHALL BE PLACED. THE METHOD OF ROCK PLACEMENT SHALL BE SUCH AS TO MINIMISE ITS BREAKDOWN ON HANDLING AND PRODUCTION OF FINES, MINIMISE THE SEGREGATION OF VARIOUS GRADES OF ROCK AND RESTRICT WATER CONTAMINATION.

GEOTEXTILE NOTES

GEOTEXTILE UNDER ROCK RIP RAP TO BE IN ACCORDANCE WITH TfNSW QA SPECIFICATION R63 STRENGTH CLASS E AND FILTRATION CLASS 3.

TABLE 1 - RIP RAP ROCK GRADING

	ROCK CLASS	ROCK SIZE (m)	ROCK MASS (kg)	MINIMUM PERCENTAGE OF ROCK LARGER THAN
ABUTMENT A AND PIER 1	1/4 TONNE	0.75	500	0
		0.55	250	50
		0.30	35	90
ABUTMENT B AND PIER 2	FACING	0.40	100	0
		0.30	35	50
		0.15	2.5	90

NOT FOR CONSTRUCTION

ISSUE	DATE	REVISION	PREP	CHECK	AUTH
B	19-08-2021	ISSUED FOR TENDER	SM	LB	PB
A	09-08-2021	ISSUED FOR TENDER	SM	LB	PB

LOCAL COUNCIL ROAD — SNOWY VALLEYS COUNCIL

REPLACEMENT OF TOWONG BRIDGE

ON TOWONG RD OVER MURRAY RIVER AT TOWONG

SCOUR PROTECTION DETAILS

Cardno (NSW/ACT) Pty Ltd | ABN 95 001 145 035
Level 9, The Forum, 203 Pacific Highway
St. Leonards, NSW 2065
Tel: 02 9496 7700 Fax: 02 9439 5170
Web: www.cardno.com.au

SOUTH WEST REGION

NSW GOVERNMENT Transport for NSW

	PREPARED	CHECKED
DESIGN	J.Guzman	L.Bai
DRAWING	A.Javier	S.Mathie
APPROVED/ DESIGN QA RECORDS	P.Boesch	

DIRECTOR

DRAWING SET No. DS2021/000055

BRIDGE No. B12447

ISSUE STATUS PRELIMINARY

ISSUE B | No OF SHEETS 57 | SHEET No 53

CAD No DS2017-002667-DC-BR-2001(05)

THIS DRAWING IS CONFIDENTIAL AND SHALL ONLY BE USED FOR THE PURPOSE OF THE NOMINATED PROJECT

PRODUCED: 25 September 2020 AT 9:17:17 AM USER: Stuart Mathie
FILE PATH: N:\Projects\600\PT186100_PARKES BYPASS\Drawings\Build\05_X\TRMS-A1-SHT.dwg
PLOT DRIVER: NONE
PEN TABLE: ----

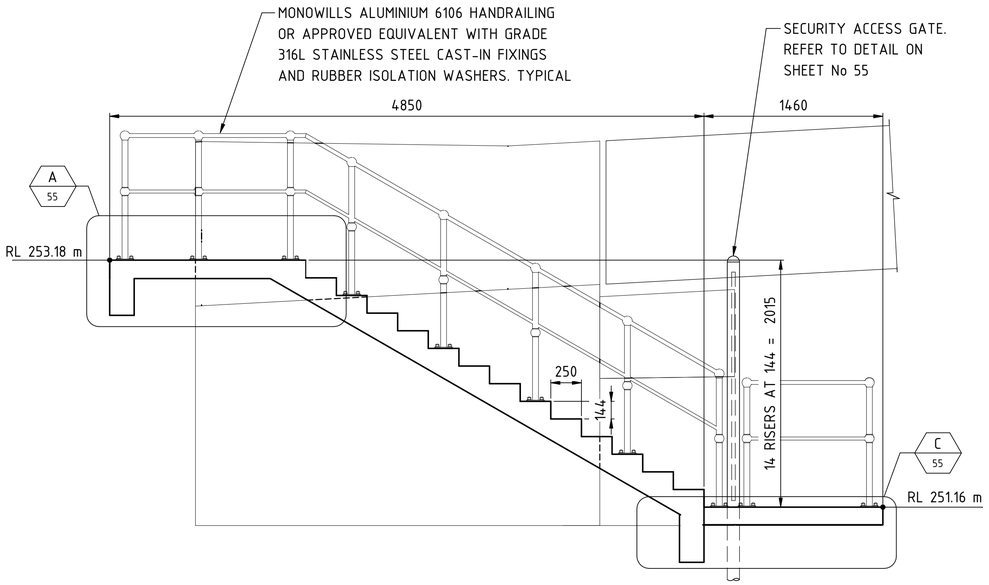

SECTION 1 / 54

0 250 500 750 1000 1250mm

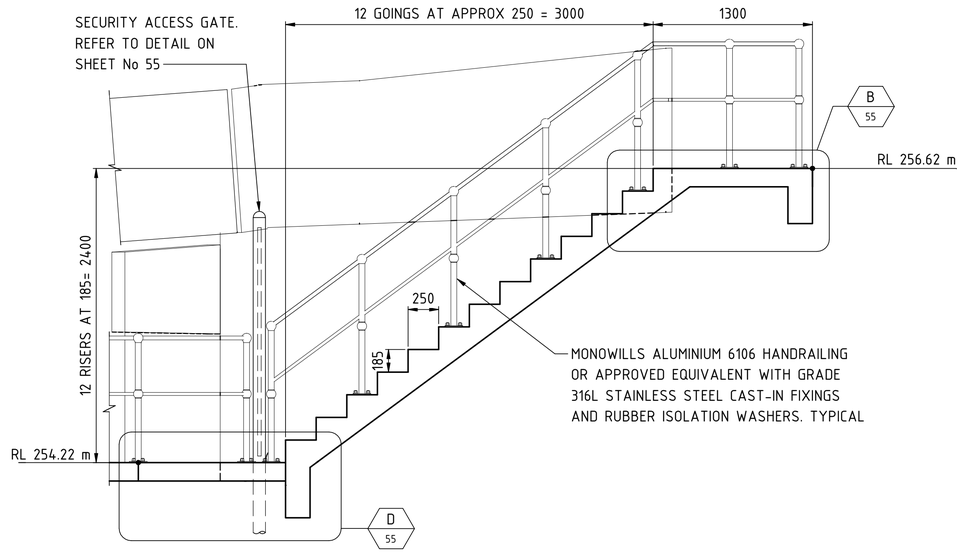

SECTION 2 / 54

0 250 500 750 1000 1250mm

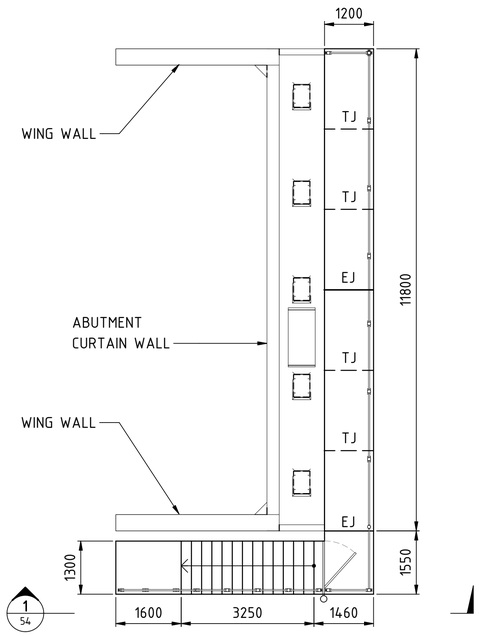

PLAN
ABUTMENT A

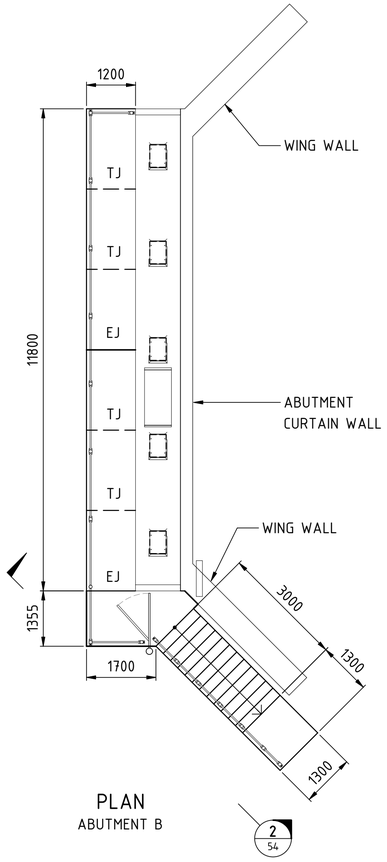

PLAN
ABUTMENT B

GENERAL NOTES

SCALE 0 1500 3000 4500 6000 7500m OR AS SHOWN.

CONCRETE EXPOSURE CLASSIFICATION: B2.
MINIMUM 28 DAY COMPRESSIVE STRENGTH OF ALL CONCRETE SHALL BE 50MPa.
MINIMUM 28 DAY COMPRESSIVE STRENGTH OF MASS CONCRETE MUST BE 20MPa.
MAINTENANCE ACCESS STEPS, LANDINGS AND LEVEL BERM MUST HAVE A TRANSVERSE BROOM FINISH IN ACCORDANCE WITH TfNSW SPECIFICATION B80.
NOMINAL COVER TO REINFORCEMENT NEAREST TO THE CONCRETE SURFACE MUST BE 50mm UNLESS SPECIFIED OTHERWISE.
THE MINIMUM LAPPED SPLICE FOR MESH MUST BE THE TWO OUTERMOST CROSS-BARS OF ONE SHEET OF MESH MUST OVERLAP WITH THE TWO OUTERMOST CROSS-BARS OF THE OTHER SHEET BEING LAPPED.

NOT FOR CONSTRUCTION

ISSUE	DATE	REVISION	PREP	CHECK	AUTH
A	09-08-2021	ISSUED FOR TENDER	SM	LB	PB

LOCAL COUNCIL ROAD — SNOWY VALLEYS COUNCIL

REPLACEMENT OF TOWONG BRIDGE

ON TOWONG RD OVER MURRAY RIVER AT TOWONG

MAINTENANCE ACCESS - SHEET A

Cardno
Cardno (NSW/ACT) Pty Ltd | ABN 95 001 145 035
Level 9, The Forum, 203 Pacific Highway
St. Leonards, NSW 2065
Tel: 02 9496 7700 Fax: 02 9439 5170
Web: www.cardno.com.au

SOUTH WEST REGION
NSW GOVERNMENT Transport for NSW

	PREPARED	CHECKED
DESIGN	J.Guzman	L.Bai
DRAWING	R.Paras	S.Mathie

APPROVED/ DESIGN QA RECORDS: P.Boesch — DIRECTOR

DRAWING SET No. DS2021/000055
BRIDGE No. B12447
ISSUE STATUS PRELIMINARY
ISSUE A | No OF SHEETS 57 | SHEET No 54

CAD No DS2017-002667-DC-BR-2001(05)

THIS DRAWING IS CONFIDENTIAL AND SHALL ONLY BE USED FOR THE PURPOSE OF THE NOMINATED PROJECT

PRODUCED: 25 September 2020 AT 9:17:17 AM USER: Stuart Mathie
FILE FORMAT: Microstation V8 DGN FILE: 800\PT181\00_PARKES BYPASS\Drawings\Build\05_XrfRMS-A1-SHT.dwg
PLOT DRIVER: NONE
PEN TABLE: ----

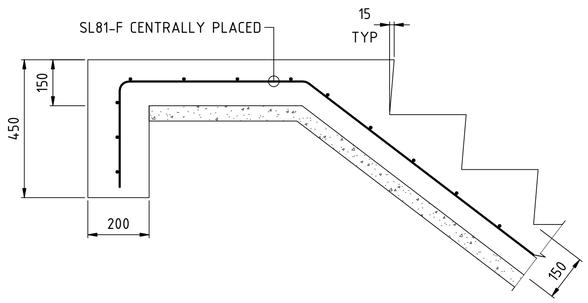

DETAIL A 54 B 54

DETAIL A SHOWN, DETAIL B SIMILAR
BUT OPPOSITE HAND

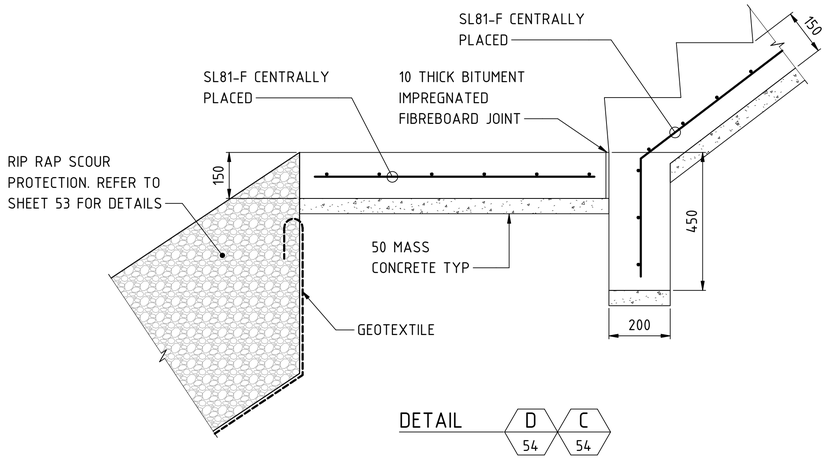

DETAIL D 54 C 54

DETAIL D SHOWN, DETAIL C SIMILAR BUT OPPOSITE HAND.
REFER TO SHEET No. 53 FOR RIP RAP DETAILS

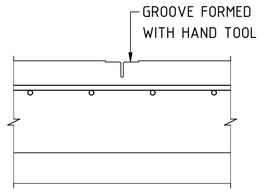

TOOLED JOINT (TJ)
AT MAX 2500 CENTRES IN
MAINTENANCE ACCESS WALKWAYS

0 50 100 150 200 250mm

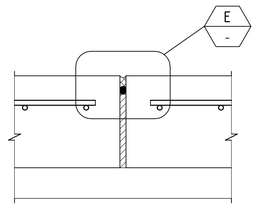

EXPANSION JOINT (EJ)
AT MAX 7500 CENTRES IN
MAINTENANCE ACCESS WALKWAYS

0 50 100 150 200 250mm

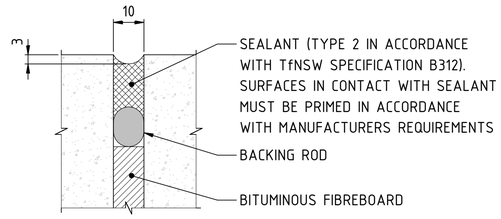

DETAIL E -

0 10 20 30 40 50mm

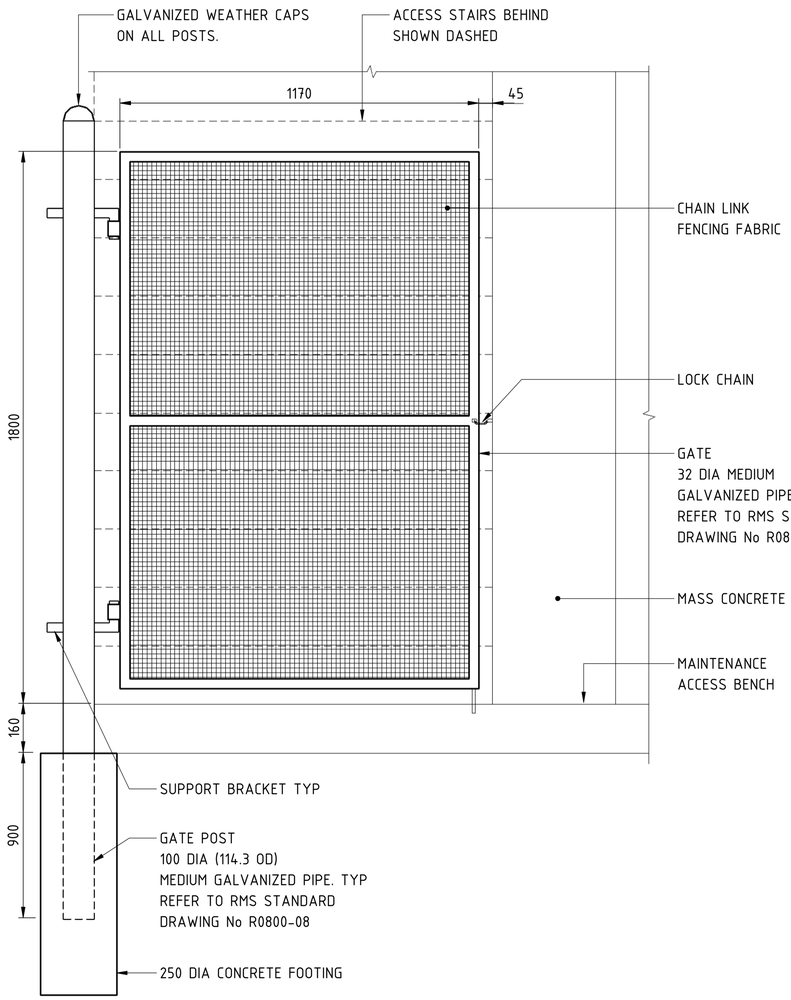

SECURITY ACCESS GATE

GENERAL NOTES

SCALE 0 200 400 600 800 1000mm OR AS SHOWN

FOR OTHER GENERAL NOTES RELATING TO THIS SHEET, SEE SHEET No. 54

NOT FOR CONSTRUCTION

ISSUE	DATE	REVISION	PREP	CHECK	AUTH
A	09-08-2021	ISSUED FOR TENDER	SM	LB	PB

LOCAL COUNCIL ROAD — SNOWY VALLEYS COUNCIL

REPLACEMENT OF TOWONG BRIDGE

ON TOWONG RD OVER MURRAY RIVER AT TOWONG

MAINTENANCE ACCESS - SHEET B

Cardno
Cardno (NSW/ACT) Pty Ltd | ABN 95 001 145 035
Level 9, The Forum, 203 Pacific Highway
St. Leonards, NSW 2065
Tel: 02 9496 7700. Fax: 02 9439 5170
Web: www.cardno.com.au

SOUTH WEST REGION
NSW GOVERNMENT Transport for NSW

	PREPARED	CHECKED
DESIGN	J.Guzman	L.Bai
DRAWING	R.Paras	S.Mathie

APPROVED/ DESIGN QA RECORDS: P.Boesch
DIRECTOR

DRAWING SET No. DS2021/000055
BRIDGE No. B12447
ISSUE STATUS PRELIMINARY
ISSUE A | No OF SHEETS 57 | SHEET No 55

CAD No DS2017-002667-DC-BR-2001(05)

THIS DRAWING IS CONFIDENTIAL AND SHALL ONLY BE USED FOR THE PURPOSE OF THE NOMINATED PROJECT

PRODUCED: 25 September 2020 AT 9:17:17 AM USER: Stuart Mathie
FILE: P:\TfNSW Projects\800\FY18\100_PARKES BYPASS\Drawings\Build\05_Xrf\RMS-A1-SHT.dwg
PLOT DRIVER: PDF
PEN TABLE: ----

SHAPE CODE	AUSTRALIAN STANDARD SHAPE	SHAPE CODE	AUSTRALIAN STANDARD SHAPE	SHAPE CODE	AUSTRALIAN STANDARD SHAPE	SHAPE CODE	AUSTRALIAN STANDARD SHAPE
S	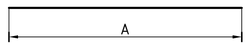	LL		VL	FITMENT BENDS 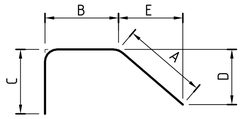	H	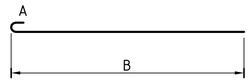
SH	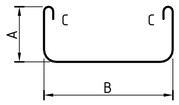	XT	FITMENT BENDS 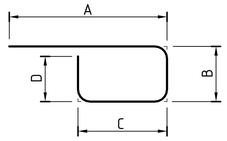	HH	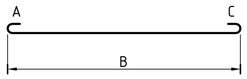	VV	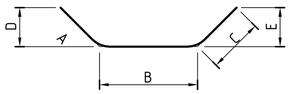
CT	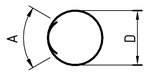 D=OD A=LAP	V	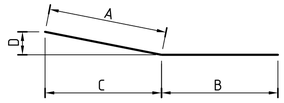	J	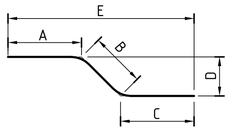	CC	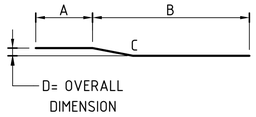
L	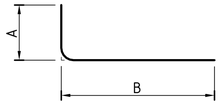	JJ	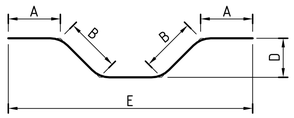	R	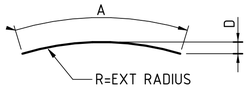	A	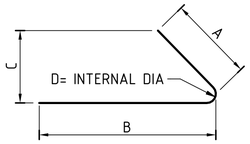
SP	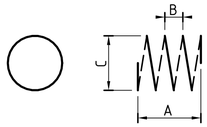	RC	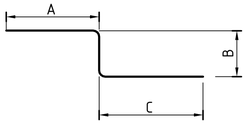	U	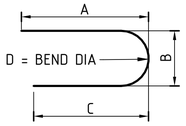	T	FITMENT BENDS 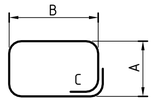
HT	FITMENT BENDS 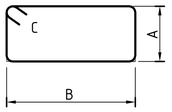	LH	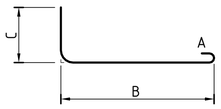	F	'A' IS IN THE DIRECTION OF THE MAIN WIRES 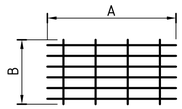		

SHAPE CODE	TfNSW STANDARD SHAPE	SHAPE CODE	TfNSW STANDARD SHAPE	SHAPE CODE	TfNSW STANDARD SHAPE	SHAPE CODE	TfNSW STANDARD SHAPE
LF	FITMENT BENDS 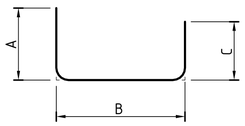	AV	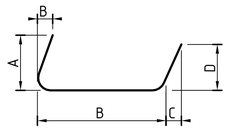	TT	FITMENT BENDS AND HOOKS 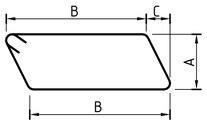	XH	FITMENT BENDS AND HOOKS 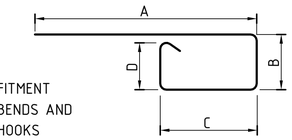
LA	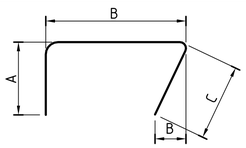	LG	FITMENT BENDS 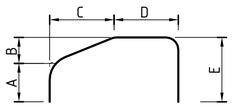	PT	FITMENT BENDS AND HOOKS 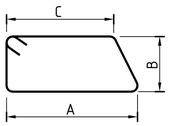	ST	FITMENT BENDS 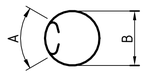
AA	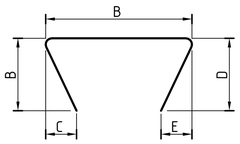	KH	FITMENT BENDS 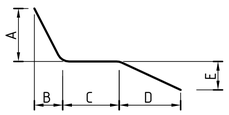	QT	FITMENT BENDS AND HOOKS 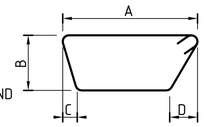	VF	FITMENT BENDS 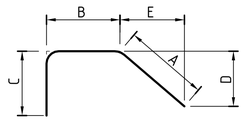
KL	FITMENT BENDS 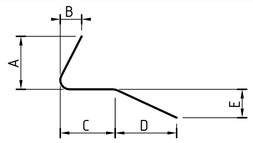	GT	FITMENT BENDS AND HOOKS 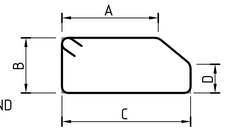	KF	FITMENT BENDS 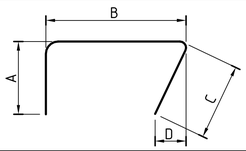	AF	FITMENT BENDS 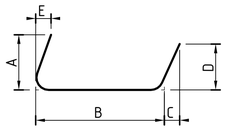

BAR MARKING LEGEND

THE METHOD USED TO LABEL REINFORCEMENT ON THE DRAWING IS AS FOLLOWS:

A1 10-N16-S-300EF

- EF — INFORMATION FOR PLACING. REFER TO NOTE 11
- 300 — SPACE ALONG LIMIT LINE
- S — BAR SHAPE CODE
- N16 — BAR SIZE IN MILLIMETRES
- N — BAR STRUCTURAL PROPERTIES
- 10 — NUMBER OF BARS IN THE SET
- A1 — BAR NUMBER IN SEQUENCE
- A — STRUCTURE ELEMENT DENOTATION

STRUCTURE ELEMENT DENOTATIONS COMMONLY USED ARE:

- A DENOTES ABUTMENTS OR ABUTMENT A
- B DENOTES ABUTMENT B
- D DENOTES DECK
- G DENOTES GIRDER
- H DENOTES PIER
- M DENOTES MAINTENANCE ACCESS WALKWAY
- P DENOTES PILES
- R DENOTES LATERAL RESTRAINT BLOCK
- S DENOTES APPROACH SLAB

REINFORCEMENT NOTES

1. AUSTRALIAN STANDARD BAR SHAPES ARE IN ACCORDANCE WITH AS 1100.501.
2. BAR SIZE IS THE NOMINAL DIAMETER IN MILLIMETRES, OR THE AS/NZS 4671 FABRIC NUMBER.
3. THE GRADE OF REINFORCEMENT, IF NOT STATED ON THE DRAWINGS, MUST BE D500N TO AS/NZS 4671.
4. WHERE SHOWN ON THE DRAWINGS, "W" MUST DENOTE PLAIN ROUND REINFORCING BARS EQUIVALENT TO GRADE R500L TO AS/NZS 4671.
5. WHERE SHOWN ON THE DRAWINGS, RL AND SL MUST DENOTE WELDED REINFORCING BAR (RECTANGULAR AND SQUARE), RESPECTIVELY.
6. DIMENSIONS SHOWN ON BAR SHAPES DIAGRAM ARE MEASURED FROM THE OUTSIDE FACES OF THE BARS AND ARE IN MILLIMETRES.
7. THE INCLUDED ANGLE OF ANY BEND MUST BE RIGHT ANGLE IF NO DIMENSIONS SHOWN.
8. BARS OF DIAMETER GREATER THAN 24mm MUST NOT BE REBENT.
9. BAR BENDING AND HOOK DETAILS MUST BE IN ACCORDANCE WITH SECTION 5.13 OF AS 5100-BRIDGE DESIGN.
10. FOR ADDITIONAL BAR SHAPES SEE SHEET No 79.
11. INFORMATION FOR PLACING
    NF - NEAR FACE
    FF - FAR FACE
    EF - EACH FACE
12. REINFORCEMENT ABBREVIATIONS ON THE DRAWINGS AND NOT DEFINED IN AS/NZS 1100 ARE AS FOLLOWS:
13. LS DENOTES LAP TO BE STAGGERED
14. ES DENOTES EQUAL SPACES OR EQUALLY SPACED.

NOT FOR CONSTRUCTION

ISSUE	DATE	REVISION	PREP	CHECK	AUTH
A	09-08-2021	ISSUED FOR TENDER	SM	LB	PB

LOCAL COUNCIL ROAD — SNOWY VALLEYS COUNCIL

REPLACEMENT OF TOWONG BRIDGE

ON TOWONG RD OVER MURRAY RIVER AT TOWONG

BAR SHAPES DIAGRAM - SHEET A

Cardno (NSW/ACT) Pty Ltd | ABN 95 001 145 035
Level 9, The Forum, 203 Pacific Highway
St. Leonards, NSW 2065
Tel: 02 9496 7700 Fax: 02 9439 5170
Web: www.cardno.com.au

SOUTH WEST REGION

NSW GOVERNMENT — Transport for NSW

	PREPARED	CHECKED
DESIGN	J.Guzman	L.Bai
DRAWING	A.Javier	S.Mathie
APPROVED/ DESIGN QA RECORDS	P.Boesch	

DIRECTOR

DRAWING SET No. DS2021/000055

BRIDGE No. B12447

ISSUE STATUS PRELIMINARY

ISSUE A | No OF SHEETS 57 | SHEET No 56

CAD No DS2017-002667-DC-BR-2001(05)

THIS DRAWING IS CONFIDENTIAL AND SHALL ONLY BE USED FOR THE PURPOSE OF THE NOMINATED PROJECT

PRODUCED: 25 September 2020 AT 9:17:17 AM USER: Stuart Mathie
FILE PATH: V:\Projects\600\PY186100_PARKES BYPASS\Drawings\Build\05_Xs\RMS-A1-SHT.dwg
PLOT DRIVER: NONE
PEN TABLE: ----

SHAPE CODE	NON-STANDARD SHAPE
AZ	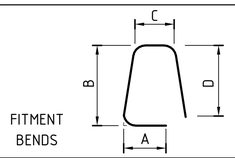
LJ	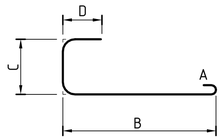

GENERAL NOTES

NOT TO SCALE
FOR OTHER GENERAL NOTES RELATING TO THIS SHEET, SEE SHEET No. 56

NOT FOR CONSTRUCTION

ISSUE	DATE	REVISION	PREP	CHECK	AUTH
A	09-08-2021	ISSUED FOR TENDER	SM	LB	PB

LOCAL COUNCIL ROAD — SNOWY VALLEYS COUNCIL

REPLACEMENT OF TOWONG BRIDGE

ON TOWONG RD OVER MURRAY RIVER AT TOWONG

BAR SHAPES DIAGRAM - SHEET B

Cardno
Cardno (NSW/ACT) Pty Ltd | ABN 95 001 145 035
Level 9, The Forum, 203 Pacific Highway
St. Leonards, NSW 2065
Tel: 02 9496 7700 Fax: 02 9439 5170
Web: www.cardno.com.au

SOUTH WEST REGION
NSW GOVERNMENT — Transport for NSW

	PREPARED	CHECKED
DESIGN	J.Guzman	L.Bai
DRAWING	A.Javier	S.Mathie

APPROVED/ DESIGN QA RECORDS: P.Boesch
DIRECTOR

DRAWING SET No. DS2021/000055
BRIDGE No. B12447
ISSUE STATUS PRELIMINARY
ISSUE A | No OF SHEETS 57 | SHEET No 57

CAD No DS2017-002667-DC-BR-2001(05)

THIS DRAWING IS CONFIDENTIAL AND SHALL ONLY BE USED FOR THE PURPOSE OF THE NOMINATED PROJECT

PRODUCED: 25 September 2020 AT 9:17:17 AM USER: Stuart Mathie
FILE PATH: N:\Projects\600\PY186100_PARKES BYPASS\Drawings\Bridge\05_XrtRMS-A1-SHT.dwg
PLOT DRIVER: NONE
PEN TABLE: ----

Appendix B

Consideration of clause 228(2) factors and matters of national environmental significance and Commonwealth land

Clause 228(2) Checklist

In addition to the requirements of the *Is an EIS required?* guideline (DUAP 1995/1996) and the *Roads and Related Facilities EIS Guideline* (DUAP 1996) as detailed in the REF, the following factors, listed in clause 228(2) of the Environmental Planning and Assessment Regulation 2000, have also been considered to assess the likely impacts of the proposal on the natural and built environment.

Factor	Impact
a) Any environmental impact on a community? During construction of the proposal, there would be impacts to traffic and transport due to temporary closure of the crossing to allow for demolition and construction. Impacts would be minimised through implementing the safeguards and management measures identified in section 7.1 of the REF.	Moderate, short-term negative
b) Any transformation of a locality? The proposal would have a moderate impact to visual and landscape character due to the demolition of the heritage timber bridge.	Moderate, long-term
c) Any environmental impact on the ecosystems of the locality? The proposal would only have minor impacts on terrestrial and aquatic environment during construction, and can be effectively managed with the detailed mitigation measures in section 7.1 of the REF.	Minor, short term negative
d) Any reduction of the aesthetic, recreational, scientific or other environmental quality or value of a locality? There would be temporary aesthetic impacts during construction of the proposal. Landscape character and visual impacts have been assessed as moderate due to the demolition of the heritage timber bridge.	Moderate, short term negative
e) Any effect on a locality, place or building having aesthetic, anthropological, archaeological, architectural, cultural, historical, scientific or social significance or other special value for present or future generations? While the existing bridge is a locally listed item of heritage significance, the dilapidation of the structure requires replacement of the bridge to ensure road user safety. Only minor and temporary impacts to the landscape during construction as a result of the presence of construction plant and equipment.	Minor, short term negative
f) Any impact on the habitat of protected fauna (within the meaning of the *National Parks and Wildlife Act 1974)?* No harm to Aboriginal objects will occur as a result of the proposal.	No likely impact
g) Any endangering of any species of animal, plant or other form of life, whether living on land, in water or in the air? The proposal is unlikely to endanger any species of animal, plant or other form of life, whether living on land, in water or in the air.	Negligible
h) Any long-term effects on the environment? The proposal would result in minor long term visual impacts due to the loss of the heritage timber truss bridge. No other long-term negative effects on the environment are anticipated.	Minor, long term
i) Any degradation of the quality of the environment? The proposal would result in localised sediment disturbance during piling activities, which would result in temporary impacts to water quality.	Minor, short term negative

Factor	Impact
There is potential for accidental spills/leaks of fuel, oil or other chemicals to impact water quality during construction. Impacts would be minor with implementation of the safeguards and management measures identified in section 7.1 of the REF.	
j) Any risk to the safety of the environment? Construction related activities pose potential risks to the safety of the environment through spills/leaks of fuel, oil or other chemicals. Impacts would be minor with implementation of the safeguards and management measures identified in section 7.1 of the REF.	Minor, short term negative
k) Any reduction in the range of beneficial uses of the environment? The proposal would not reduce the range of beneficial uses of the environment except during construction as a result of the closure of the crossing and potential use of the camping ground on the NSW side as a temporary site compound location.	Minor, short term negative
l) Any pollution of the environment? Construction related activities may result in pollution of the environment through spills/leaks of fuel, oil or other chemicals. Impacts would be minor with implementation of the safeguards and management measures identified in section 7.1 of the REF.	Minor, short term negative
m) Any environmental problems associated with the disposal of waste? All wastes generated by the proposal would be disposed of at an off-site facility which is licenced to receive such waste. There would be no significant environmental problems associated with waste disposal.	Minor, short term negative
n) Any increased demands on resources (natural or otherwise) that are, or are likely to become, in short supply? All resources required by the proposal are readily available and are not likely to become in short supply, however local supply may be limited due to rural location of the proposal.	No likely impact
o) Any cumulative environmental effect with other existing or likely future activities? Assessment of cumulative impacts for the proposal is provided in section 6.12. No significant cumulative impacts have been identified for the proposal.	No likely impact
p) Any impact on coastal processes and coastal hazards, including those under projected climate change conditions?	N/A

Matters of National Environmental Significance and Commonwealth land

Under the environmental assessment provisions of the EPBC Act, the following matters of national environmental significance and impacts on the Commonwealth land are required to be considered to assist in determining whether the proposal should be referred to the Australian Government Department of Agriculture, Water and Environment.

A referral is not required for proposed actions that may affect nationally listed threatened species, endangered ecological communities and migratory species. Impacts on these matters are still assessed as part of the REF in accordance with Australian Government significant impact criteria and taking into account relevant guidelines and policies.

Factor	Impact
a) Any impact on a World Heritage property?	None
b) Any impact on a National Heritage place?	None
c) Any impact on a wetland of international importance?	None
d) Any impact on a listed threatened species or communities? The proposal is not expected to significantly impact threatened species or ecological communities or their habitats, within the meaning of the EPBC Act or FM Act and therefore a SIS or Biodiversity Development Assessment Report is not required. The proposal is not expected to significantly impact threatened species, ecological communities or migratory species, within the meaning of the EPBC Act. No KTPs listed under the FM Act, BC Act and / or EPBC Act would be exacerbated by the proposal.	Negligible
e) Any impacts on listed migratory species?	None
f) Any impact on a Commonwealth marine area?	None
g) Does the proposal involve a nuclear action (including uranium mining)?	N/A
h) Additionally, any impact (direct or indirect) on the environment of Commonwealth land?	N.A

Appendix C

Statutory consultation checklists

Infrastructure SEPP

Certain development types

Development type	Description	Yes/ No	If 'yes' consult with	ISEPP clause
Car Park	Does the project include a car park intended for the use by commuters using regular bus services?	No	-	ISEPP cl. 95A
Bus Depots	Does the project propose a bus depot?	No	-	ISEPP cl. 95A
Permanent road maintenance depot and associated infrastructure	Does the project propose a permanent road maintenance depot or associated infrastructure such as garages, sheds, tool houses, storage yards, training facilities and workers' amenities?	No	-	ISEPP cl. 95A

Development within the Coastal Zone

Issue	Description	Yes/No/NA	If 'yes' consult with	ISEPP clause
Development with impacts on certain land within the coastal zone	Is the proposal within a coastal vulnerability area and is inconsistent with a certified coastal management program applying to that land?	N/A	-	ISEPP cl. 15A

Note: See interactive map here: https://www.planning.nsw.gov.au/policy-and-legislation/coastal-management. Note the coastal vulnerability area has not yet been mapped.

Note: a certified coastal zone management plan is taken to be a certified coastal management program

Council related infrastructure or services

Issue	Potential impact	Yes/ No	If 'yes' consult with	ISEPP clause
Stormwater	Is the work likely to have a *substantial* impact on the stormwater management services which are provided by council?	No	-	ISEPP cl.13(1)(a)
Traffic	Is the work likely to generate traffic to an extent that will *strain* the capacity of the existing road system in a local government area?	No	-	ISEPP cl.13(1)(b)
Sewerage system	Will the work involve connection to a council owned sewerage system? If so, will this connection	No	-	ISEPP cl.13(1)(c)

Issue	Potential impact	Yes/ No	If 'yes' consult with	ISEPP clause
	have a *substantial* impact on the capacity of any part of the system?			
Water usage	Would the work involve connection to a council owned water supply system? If so, would this require the use of a *substantial* volume of water?	No	-	ISEPP cl.13(1)(d)
Temporary structures	Would the work involve the installation of a temporary structure on, or the enclosing of, a public place which is under local council management or control? If so, would this cause more than a *minor* or *inconsequential* disruption to pedestrian or vehicular flow?	Yes	Snowy Valleys Council (NSW) and Towong Shire Council (Victorian)	ISEPP cl.13(1)(e)
Road and footpath excavation	Would the work involve more than *minor* or *inconsequential* excavation of a road or adjacent footpath for which council is the roads authority and responsible for maintenance?	Yes	Snowy Valleys Council (NSW) and Towong Shire Council (Victorian)	ISEPP cl.13(1)(f)

Local heritage items

Issue	Potential impact	Yes/ No	If 'yes' consult with	ISEPP clause
Local heritage	Is there is a local heritage item (that is not also a State heritage item) or a heritage conservation area in the study area for the work? If yes, does a heritage assessment indicate the potential impacts to the heritage significance of the item/area are more than *minor* or *inconsequential?*	No	Snowy Valleys Council (NSW)	ISEPP cl.14

Flood liable land

Issue	Potential impact	Yes/ No	If 'yes' consult with	ISEPP clause
Flood liable land	Is the work located on flood liable land? If so, would the work change flood patterns to more than a *minor* extent?	No	-	ISEPP cl.15
Flood liable land	Is the work located on flood liable land? (to any extent). If so, does the work comprise more than minor alterations or additions to, or the	No	-	ISEPP cl.15AA

Issue	Potential impact	Yes/ No	If 'yes' consult with	ISEPP clause
	demolition of, a building, emergency work or routine maintenance			

Note: Flood liable land means land that is susceptible to flooding by the probable maximum flood event, identified in accordance with the principles set out in the manual entitled *Floodplain Development Manual: the management of flood liable* land published by the New South Wales Government.

Public authorities other than councils

Issue	Potential impact	Yes/No	If 'yes' consult with	ISEPP clause
National parks and reserves	Is the work adjacent to a national park or nature reserve, or other area reserved under the *National Parks and Wildlife Act 1974*, or on land acquired under that Act?	No	-	ISEPP cl.16(2)(a)
National parks and reserves	Is the work on land in Zone E1 National Parks and Nature Reserves or in a land use zone equivalent to that zone?	No	-	ISEPP cl. 16(2)(b)
Aquatic reserves	Is the work adjacent to an aquatic reserve or a marine park declared under the *Marine Estate Management Act 2014*?	No	-	ISEPP cl.16(2)(c)
Sydney Harbour foreshore	Is the work in the Sydney Harbour Foreshore Area as defined by the *Place Management NSW Act 1998?*	No		ISEPP cl.16(2)(d)
Bush fire prone land	Is the work for the purpose of residential development, an educational establishment, a	No	-	ISEPP cl.16(2)(f)

Issue	Potential impact	Yes/No	If 'yes' consult with	ISEPP clause
	health services facility, a correctional centre or group home in bush fire prone land?			
Artificial light	Would the work increase the amount of artificial light in the night sky and that is on land within the dark sky region as identified on the dark sky region map? (Note: the dark sky region is within 200 kilometres of the Siding Spring Observatory)	No	-	ISEPP cl.16(2)(g)
Defence communications buffer land	Is the work on buffer land around the defence communications facility near Morundah? (Note: refer to Defence Communications Facility Buffer Map referred to in clause 5.15 of Lockhardt LEP 2012, Narrandera LEP 2013 and Urana LEP 2011.	No	-	ISEPP cl. 16(2)(h)
Mine subsidence land	Is the work on land in a mine subsidence district within the meaning of the *Mine Subsidence Compensation Act 1961*?	No	-	ISEPP cl. 16(2)(i)

Appendix D
Biodiversity Assessment Search Results

Terrestrial Flora and Fauna Observed in the Field Survey

i) Flora Species

Native (N), Exotic (E), HTE - High Threat Exotic (BC Act), WoNS - Weeds of national Significance, PW - Priority Weed (Biosecurity Act)

Family	Scientific Name	Common Name
Asparagaceae	*Asparagus aethiopicus*	Asparagus Fern
Asteraceae	*Chondrilla*	Skeleton
Asteraceae	*Cirsium vulgare*	Spear Thistle
Asteraceae	*Conyza parva*	Fleabane
Asteraceae	*Sonchus asper*	Prickly Sow-
Casuarinaceae	*Casuarina cunninghamian*	River Oak
Cyperaceae	*Cyperus*	Umbrella
Fabaceae	*Acacia dealbata*	Silver Wattle
Fabaceae/faboideae	*Trifolium*	White Clover
Fabaceae/faboideae/	*Acacia*	Blackwood
Geraniaceae	*Geranium molle subsp. molle*	Cranesbill Geranium
Malaceae	*Pyracantha*	Orange
Malvaceae	*Malva parviflora*	Small-
Myrtaceae	*Callistemon*	Lemon
Myrtaceae	*Eucalyptus camaldulensis*	Eucalypt
Pittosporaceae	*Bursaria*	Native
Platanaceae	*Platanus*	London
Plantaginaceae	*Plantago*	Ribwort
Poaceae	*Cynodon*	Common
Poaceae	*Bromus*	Prairie Grass
Poaceae	*Dactylis*	Cocksfoot
Poaceae	*Lolium*	Perennial
Poaceae	*Paspalum*	Paspalum
Poaceae	*Pennisetum*	Kikuyu,
Polygonaceae	*Persicaria*	Water
Polygonaceae	*Rumex crispus*	Curled Dock
Populus	*Poplar*	Eastern
Rosaceae	*Rubus fruticosus sp. agg.*	Blackberry complex
Salicaceae	*Salix babylonica*	Weeping Willow
Salicaceae	*Salix viminalis*	Common
Typhaceae	*Typha orientalis*	Cumbungi
Verbenaceae	*Verbena*	Purpletop

ii) Fauna Species

Class	Family	Common Name	Scientific Name	Observation Type
Aves	Acanthizidae	Brown Gerygone	*Gerygone mouki*	Seen
Aves	Alcedinidae	Laughing Kookaburra	*Dacelo novaeguineae*	Heard
Aves	Anatidae	Australian Wood Duck	*Chenonetta jubata*	Seen
Aves	Anatidae	Pacific Black Duck	*Anas superciliosa*	Seen
Aves	Artamidae	Australian Magpie	*Cracticus tibicen*	Seen / Heard
Aves	Artamidae	Grey Butcherbird	*Cracticus torquatus*	Heard
Aves	Cacatuidae	Little Corella	*Cacatua sanguinea*	Seen / Heard
Aves	Cacatuidae	Sulphur-crested Cockatoo	*Cacatua galerita*	Seen / Heard
Aves	Corvidae	Australian Raven	*Corvus coronoides*	Seen / Heard
Aves	Cuculidae	Brush Cuckoo	*Cacomantis variolosus*	Seen
Aves	Estrildidae	Red-browed Finch	*Neochmia temporalis*	Seen
Aves	Maluridae	Superb Fairy-wren	*Malurus cyaneus*	Seen
Aves	Monarchidae	Magpie-lark	*Grallina cyanoleuca*	Seen / Heard
Aves	Pardalotidae	Striated Pardalote	*Pardalotus striatus*	Seen

	Aves	Threskiornithidae	Australian White Ibis	*Threskiornis molucca*	Seen
	Aves	Threskiornithidae	Straw-necked Ibis	*Threskiornis spinicollis*	Seen
	Reptilia	Agamidae	Jacky Lizard	*Amphibolurus muricatus*	Seen
	Reptilia	Scincidae	Eastern Water-skink	*Eulamprus quoyii*	Seen
	Reptilia	Scincidae	unidentified grass skink	*Lamprophis sp.*	Seen

Threatened Species, Populations and Communities and their Likelihood of Occurrence

Species	Act				Source / No. Records / Date of Record (20 km)		Likelihood of Occurrence
	BC	FM	EPBC	FFG			
Fish							
Macquaria australasica (Macquarie Perch)		E	E	L	Pred. Distribution (Locality) (NSW DPI 2016), PMST - Species or species habitat may occur within area	Macquarie Perch are found in the Murray-Darling Basin (particularly upstream reaches) and parts of south-eastern coastal NSW, including the Hawkesbury and Shoalhaven catchments, where they are found in rivers and lakes, but particularly the upper reaches of rivers and their tributaries. It prefers clear water and deep, rocky holes with extensive cover in the form of aquatic vegetation, large boulders, debris and overhanging banks and is found in both river and lake habitats, especially in the upper reaches of rivers and their tributaries (NSW DPI 2016b). It spawns in spring or summer and lays eggs over stones and gravel in shallow, fast-flowing upland streams or flowing parts of rivers. Macquarie Perch inhabiting impoundments would likely undertake upstream spawning migration in October to mid-January after which adults usually return to the impoundments. Migration may not be necessary in stream-dwelling fish. Macquarie Perch is an active predator of macroinvertebrates. While other large-bodied perch-like fish are generally higher-order ambush predators that may have limited range, the Macquarie Perch tends to have a relatively larger linear (along shore) diel range (Ebner et al. 2010). A study in a Canberra reservoir found that Macquarie Perch has a mean linear diel range of 516 m (± 89 S.E.) which suggests that small and discontinuous pools would not provide preferred habitat for this species (Ebner et al. 2010). The nearest record is from 1981 Cudgewa Creek over 10 km from the Study Area. The Murry River within the Locality does not include the predicted habitat distribution for this species (NSW DPI 2016). The nearest suitable habitat identified by NSW DPI (2016a) is in the Tooma River. The lower 4 km of Tooma River, which flows into the Murray River 7 km downstream of the Study Area, is located within the Locality.	Low
Maccullochella macquariensis Trout Cod		E	E	L	Pred. Distribution (Locality) (NSW DPI 2016), PMST - species habitat likely to occur within area	Trout Cod is listed as endangered under the FM Act and EPBC Act. It is usually associated with deeper pools and instream cover such as logs and boulders (MDBA 2011d). It was once widespread throughout the southern tributaries of the Murray-Darling River System, but has undergone a dramatic decline in distribution and abundance over the past century due to various pressures such as overfishing, altered flow and temperature regimes, habitat degradation, deterioration in water quality and competition from alien fish species (McDowell 1996). Its natural population is now limited to a single, self-sustaining population in the Murray River between Yarrawonga and Barmah (MDBA 2011d). The other populations are small translocated populations present in Cataract Dam, and in about 15 km of the upper reaches of Sevens Creek near Euroa in Vic. This species has been reintroduced to several rivers in the Murray-Darling Basin as part of a long term stocking program that begun in the late 1980s and, while Record Viewer does not include any records of this species in the Bogan River Catchment, there are 2006 and 2007 records of this species in the Macquarie River downstream of Lake Burrendong near Dubbo and Wellington. Unfortunately, these reintroductions have not resulted in the establishment of viable populations (MDBA 2011d). There is a 2008 record in the ALA Database from the Murray River 20 km downstream of the Study Area at Pine Mountain. Suitable habitat occurs in the Murray River 7 km downstream of the Study Area, just upstream of the confluence of the Tooma River, but not in the Study Area (NSW DPI 2016).	Low
Maccullochella peelii Murray Cod			V	L	Stocking in Study Area (NSW DPI 2021). Records (ALA 2021),	Murray Cod is listed as vulnerable under the EPBC Act. Murray Cod was formerly widespread and abundant in the lower and mid-altitude reaches of the Murray-Darling Basin but now has a patchy distribution and abundance across its historic range (MDBA 2011a). Both hatchery-bred and wild-caught individuals have been translocated and stocked outside this natural distribution range. This species has been found in diverse habitats including flowing and standing waters, small, clear, rocky streams on the inland slopes and uplands of the Great Diving Range, large, turbid, meandering slow-flowing rivers, creeks, anabranches, and lakes and larger billabongs of the	High

Species	Act				Source / No. Records / Date of Record (20 km)		Likelihood of Occurrence
	BC	FM	EPBC	FFG			
					PMST - Species or species habitat known to occur within area	inland plains of the Murray Darling Basin (NMCRT 2010). Murray Cod are usually found in association with large rocks, large snags and smaller structural woody habitat, undercut banks and over-hanging vegetation, but also frequent the main river channel and larger tributaries and anabranches. Commercial fisheries data indicate that natural populations declined in the 1920s and then again dramatically in the 1950s. The ALA database includes a 2011 record from the Murray River 5 km downstream near Farran's Lookout and a 2016 record from the Murray River 9 km downstream just below the confluence with Tooma River. Murray Cod has also been released into the Murray River at Towong as part of the NSW DPI Fish Stocking Program, with almost 10,000 individuals released since 2012, including 4,000 in 2019/2020. Several thousand more were released elsewhere in the Murray River upstream of Hume Dam. Murray River at Towong could provide suitable habitat for Murray Cod.	
Nannoperca australis Southern Pygmy Perch		E			Pred. Distribution (Study Area and Locality) (NSW DPI 2016)	Southern Pygmy Perch, listed as endangered under the FM Act, is generally considered a still water or wetland species (Kuiter et al., 1996; Allen et al., 2002), though it probably once inhabited a range of habitats in the absence of disturbance. Known populations are in the Lachlan River, including Blakney Creek (NSW DPI, 2015), in the Murray River Catchment in two small creeks (Coppabella Creek and Jingellic Creeks) near Jingellic (approximately 100 km downstream of Khancoban Reservoir) (NSW DPI, 2017d) and in the Snowy River downstream of Snowy Falls (from approximately 15 km to 20 km downstream of the confluence with the Delegate River) (Gilligan & Williams, 2008). They are also known to occur in wetland habitat near Khancoban below Khancoban Dam Wall. There are no records from the Locality in the ALA database, though suitable habitat occurs within the Study Area (NSW DPI 2016). Redfin Perch is known to predate on Southern Pygmy Perch. The likely presence of redfin perch in this section of the Murray River would substantially reduce the potential Southern Pygmy Perch being present in the Study Area.	Moderate
Galaxias rostratus Flathead Galaxias		CE	CE		Pred. Distribution (Study Area and Locality) (NSW DPI 2016)	A small native fish that are known from the southern part of the Murray Darling Basin. They have been recorded in the Macquarie, Lachlan, Murrumbidgee and Murray Rivers in NSW. Despite extensive scientific sampling over the past 15 years there have been very few recorded sightings of flathead Galaxias. The species is now only known from the upper Murray River near Tintaldra and wetland areas near Howlong. There are records from the Murray River within 20 km upstream of Towong in the ALA database from 1992 and in tributaries of the Murry River downstream at Tintaldra from 2002 (ALA 2021). The predicted distribution includes the Murray River within the Study Area (NSW DPI 2016). The likely presence of redfin perch in this section of the Murray River would substantially reduce the potential Southern Pygmy Perch being present in the Study Area.	Moderate
Euastacus armatus Murray crayfish		V		L	Pred. Distribution (Study Area and Locality). (NSW DPI 2016)	Murray Crayfish is listed as vulnerable under the FM Act and threatened under the FFG Act. Murray Crayfish prefers cool, well oxygenated flowing water and is found in a range of environments, such as pasture-lands to sclerophyll forest. It tends to be most active in the cooler months between May and October and becomes less active during the warmer months (NSW DPI, 2019b). There is a 2008 ALA record from Corryong Creek 6 km upstream of the Study Area. The Murray River at Towong within the predicted distribution of this species (NSW DPI, 2016).	High
Flora							
Thesium australe Austral Toadflax	V		V		BioNet,1, 2001 15 km from Study Area	Found in very small populations scattered across eastern NSW, along the coast, and from the Northern to Southern Tablelands. It is also found in Tasmania and Queensland and in eastern Asia. Occurs in grassland on coastal headlands or grassland and grassy woodland away from the coast. Often found in association with Kangaroo Grass (*Themeda triandra*).	Low
Amphibians							

Species	Act				Source / No. Records / Date of Record (20 km)		Likelihood of Occurrence
	BC	FM	EPBC	FFG			
Litoria raniformis Growling Grass Frog	E		V	L	Records from the Locality (VBA), no recent records from Locality in ALA database.	Growling Grass Frog / Southern Bell Frog is currently widespread throughout the Murray River valley and has been recorded from six Catchment Management Areas in NSW: Lower Murray Darling, Murrumbidgee, Murray, Lachlan, Central West and South East. Found mostly amongst emergent vegetation, including Bullrush (Typha sp.), Reeds (Phragmites sp.) and Sedges (Eleocharis sp.), in or at the edges of still or slow-flowing water bodies such as lagoons, swamps, lakes, ponds and farm dams.	Low
Pseudophryne bibronii Brown Toadlet				L	Records from the Locality (VBA)	A small brownish coloured toadlet only 2 - 3 cm long. It is endemic to south-eastern Australia including Tasmania and is found in a variety of habitats not necessarily associated with permanent water. It utilises a wide variety of habitats, including dry forests, woodland, shrubland, grassland, coastal swamps, heathland, and sub-alpine areas. They live in areas that are likely to be inundated after rain. They shelter in damp areas under leaf litter, logs, or other forms of cover.	Low
Pseudophryne corroboree Southern Corroboree Frog	CE		CE		BioNet,3, 2001, 30 km from Study Area	The Southern Corroboree Frog is limited to sphagnum bogs of the northern Snowy Mountains, in a strip from the Maragle Range in the north-west, through Mt Jagungal to Smiggin Holes in the south. Its range is entirely within Kosciuszko National Park. Summer breeding habitat is pools and seepages in sphagnum bogs, wet tussock grasslands and wet heath. Outside the breeding season adults move away from the bogs into the surrounding heath and snowgum woodland to overwinter under litter, logs and dense groundcover.	None
Reptiles							
Varanus rosenbergi Rosenberg's Goanna	V				BioNet,10, 2003, 15 km from Study Area	Rosenberg's Goanna occurs on the Sydney Sandstone in Wollemi National Park to the north-west of Sydney, in the Goulburn and ACT regions and near Cooma in the south. There are records from the South West Slopes near Khancoban and Tooma River. Also occurs in South Australia and Western Australia. Found in heath, open forest and woodland. Associated with termites, the mounds of which this species nests in; termite mounds are a critical habitat component. Shelters in hollow logs, rock crevices and in burrows, which they may dig for themselves, or they may use other species' burrows, such as rabbit warrens.	None
Birds							
Anthochaera Phrygia Regent Honeyeater			CE		PMST - Foraging, feeding or related behaviour likely to occur within area. No records from Locality (ALA)	The Regent Honeyeater mainly inhabits temperate woodlands and open forests of the inland slopes of south-east Australia. Birds are also found in drier coastal woodlands and forests in some years. The species inhabits dry open forest and woodland, particularly Box-Ironbark woodland, and riparian forests of River Sheoak. Regent Honeyeaters usually nest in horizontal branches or forks in tall mature Eucalypts and Sheoaks. Once recorded between Adelaide and the central coast of Queensland, its range has contracted dramatically in the last 30 years to between north-eastern Victoria and south-eastern Queensland. There are only three known key breeding regions remaining: north-east Victoria (Chiltern-Albury), and in NSW at Capertee Valley and the Bundarra-Barraba region. In NSW the distribution is very patchy and mainly confined to the two main breeding areas and surrounding fragmented woodlands. In some years flocks converge on flowering coastal woodlands and forests.	Low
Ardea alba Great Egret				L		Breeds in colonies in trees close to large lakes with reed beds or other extensive wetlands. Both males and females build the nest, which is a platform made of sticks located in a tree above water. They may re-use nests from previous years.	Low
Artamus cyanopterus cyanopterus	V				BioNet,1, 2015, 17 km from Study Area	Dusky woodswallows are widespread in eastern, southern and south western Australia. The species occurs throughout most of New South Wales, but is sparsely scattered in, or largely absent from, much of the upper western region. Most breeding activity occurs on the western slopes of the Great Dividing Range. Primarily inhabit dry, open eucalypt forests and woodlands, including mallee associations, with an open or sparse understorey of	Low

Species	Act				Source / No. Records / Date of Record (20 km)		Likelihood of Occurrence
	BC	FM	EPBC	FFG			
Dusky Woodswallow						eucalypt saplings, acacias and other shrubs, and ground-cover of grasses or sedges and fallen woody debris. It has also been recorded in shrublands, heathlands and very occasionally in moist forest or rainforest. Also found in farmland, usually at the edges of forest or woodland.	
Botaurus poiciloptilus Australasian Bittern			E		PMST - Species or species habitat may occur within area. No recent records from the Locality (ALA)	Australasian Bitterns are widespread but uncommon over south-eastern Australia. In NSW they may be found over most of the state except for the far north-west. It occurs in association with permanent freshwater wetlands with tall, dense vegetation, particularly bullrushes (Typha spp.) and spikerushes (Eleocharis spp.), and, rarely, estuarine habitats.	Low
Calidris ferruginea Curlew Sandpiper			CE		PMST - Species or species habitat may occur within area. No recent records from the Locality (ALA)	The breeding range of the Curlew Sandpiper is mainly restricted to the Arctic of northern Siberia, including Yamal Peninsula east to Kolyuchiskaya Gulf, Chokotka Peninisula, and also New Siberian Island. Curlew Sandpipers mainly occur on intertidal mudflats in sheltered coastal areas, such as estuaries, bays, inlets and lagoons, and also around non-tidal swamps, lakes and lagoons near the coast and sometimes inland, and ponds in saltworks and sewage farms.	Low
Falco hypoleucos Grey Falcon			V		PMST - Species or species habitat likely to occur within area. No records from the Locality (ALA)	Sparsely distributed in NSW, chiefly throughout the Murray-Darling Basin, with the occasional vagrant east of the Great Dividing Range. Usually restricted to shrubland, grassland and wooded watercourses of arid and semi-arid regions, although it is occasionally found in open woodlands near the coast. Usually restricted to shrubland, grassland and wooded watercourses of arid and semi-arid regions, although it is occasionally found in open woodlands near the coast. Also occurs near wetlands where surface water attracts prey.	Low
Falco subniger Black Falcon	V				BioNet, 6, 1970, > 15 km from Study Area	Widely, but sparsely, distributed in New South Wales, mostly occurring in inland regions. Some reports of 'Black Falcons' on the tablelands and coast of New South Wales are likely to be referrable to the Brown Falcon. In New South Wales there is assumed to be a single population that is continuous with a broader continental population, given that falcons are highly mobile, commonly travelling hundreds of kilometres. The Black Falcon occurs as solitary individuals, in pairs, or in family groups of parents and offspring.	Moderate
Grantiella picta Painted Honeyeater					PMST - Species or species habitat likely to occur within area. No records within the Locality (ALA)	The Painted Honeyeater is nomadic and occurs at low densities throughout its range. The greatest concentrations of the bird and almost all breeding occurs on the inland slopes of the Great Dividing Range in NSW, Victoria and southern Queensland. During the winter it is more likely to be found in the north of its distribution. Inhabits Boree, Brigalow and Box-Gum Woodlands and Box-Ironbark Forests. A specialist feeder on the fruits of mistletoes growing on woodland eucalypts and acacias. Prefers mistletoes of the genus Amyema.	Low
Hieraaetus morphnoides Little Eagle	V			L	Records within 10 km (VBA and ALA)	The Little Eagle is found throughout the Australian mainland except the most densely forested parts of the Dividing Range escarpment. It occurs as a single population throughout NSW. Occupies open Eucalypt forest, woodland or open woodland. Sheoak or Acacia woodlands and riparian woodlands of interior NSW are also used.	Moderate
Petroica phoenicea Flame Robin	V				BioNet,1, 1983 >15 km, recent records within	The Flame Robin is endemic to south eastern Australia, and ranges from near the Queensland border to south east South Australia and also in Tasmania. In NSW, it breeds in upland areas and in winter, many birds move to the inland slopes and plains. It is likely that there are two separate populations in NSW, one in the Northern	Low

Species	Act				Source / No. Records / Date of Record (20 km)		Likelihood of Occurrence
	BC	FM	EPBC	FFG			
					the Locality (ALA) < 5 km from Study Area.	Tablelands, and another ranging from the Central to Southern Tablelands. Breeds in upland tall moist eucalypt forests and woodlands, often on ridges and slopes. Prefers clearings or areas with open understoreys. The groundlayer of the breeding habitat is dominated by native grasses and the shrub layer may be either sparse or dense. Occasionally occurs in temperate rainforest, and also in herbfields, heathlands, shrublands and sedgelands at high altitudes.	
Callocephalon fimbriatum Gang-gang Cockatoo	V				BioNet,7, 1994 > 15 km from Study Area. Recent record from Locality (ALA)	In summer, occupies tall montane forests and woodlands, particularly in heavily timbered and mature wet sclerophyll forests. Also occur in subalpine Snow Gum woodland and occasionally in temperate or regenerating forest. In winter, occurs at lower altitudes in drier, more open eucalypt forests and woodlands, particularly in box ironbark assemblages, or in dry forest in coastal areas. It requires tree hollows in which to breed.	Moderate
Melanodryas cucullate Hooded Robin	V			L	Records within Locality (VBA), no recent records in ALA database	The Hooded Robin is widespread, found across Australia, except for the driest deserts and the wetter coastal areas - northern and eastern coastal Queensland and Tasmania. However, it is common in few places, and rarely found on the coast. Prefers lightly wooded country, usually open Eucalypt woodland, Acacia scrub and mallee, often in or near clearings or open areas. Requires structurally diverse habitats featuring mature Eucalypts, saplings, some small shrubs and a ground layer of moderately tall native grasses.	Low
Ninox strenua Powerful Owl	V,P				BioNet,1, 2015 < 20 km from Study Area	The Powerful Owl is endemic to eastern and south-eastern Australia, mainly on the coastal side of the Great Dividing Range from Mackay to south-western Victoria. In NSW, it is widely distributed throughout the eastern forests from the coast inland to tablelands, with scattered records on the western slopes and plains suggesting occupancy prior to land clearing. Now at low densities throughout most of its eastern range, rare along the Murray River. The Powerful Owl inhabits a range of vegetation types, from woodland and open sclerophyll forest to tall open wet forest and rainforest. The Powerful Owl requires large tracts of forest or woodland habitat but can occur in fragmented landscapes as well. The species breeds and hunts in open or closed sclerophyll forest or woodlands and occasionally hunts in open habitats. It roosts by day in dense vegetation comprising species such as Turpentine *Syncarpia glomulifera*, Black She-oak *Allocasuarina littoralis*, Blackwood *Acacia melanoxylon*, Rough-barked Apple Angophora floribunda, Cherry Ballart *Exocarpus cupressiformis* and a number of eucalypt species.	Low
Numenius madagascariensis Eastern Curlew			CE		PMST - Species or species habitat may occur within area. No records within Locality	Within Australia, the Eastern Curlew has a primarily coastal distribution. The species is found in all states, particularly the north, east, and south-east regions including Tasmania. The Eastern Curlew is most commonly associated with sheltered coasts, especially estuaries, bays, harbours, inlets and coastal lagoons, with large intertidal mudflats or sandflats, often with beds of seagrass.	Low
Rostratula australis Australian Painted Snipe			E		PMST - Species or species habitat may occur within area. No records within Locality	Most records are from the south east, particularly the Murray Darling Basin, with scattered records across northern Australia and historical records from around the Perth region in Western Australia. Prefers fringes of swamps, dams and nearby marshy areas where there is a cover of grasses, lignum, low scrub or open timber. Nests on the ground amongst tall vegetation, such as grasses, tussocks or reeds.	Low
Pyrrholaemus sagittatus Speckled Warbler	V			L	Records within Locality (VBA)	The Speckled Warbler lives in a wide range of Eucalyptus dominated communities that have a grassy understorey, often on rocky ridges or in gullies. Typical habitat would include scattered native tussock grasses, a sparse shrub layer, some eucalypt re-growth and an open canopy. Large, relatively undisturbed remnants are required for the species to persist in an area.	Low

Species	Act				Source / No. Records / Date of Record (20 km)		Likelihood of Occurrence
	BC	FM	EPBC	FFG			
Lophoictinia isura Square-tailed Kite	V				BioNet,1, 2014, 15 km from Study Area	Typically inhabits coastal forested and wooded lands of tropical and temperate Australia. In NSW it is often associated with ridge and gully forests dominated by *Eucalyptus longifolia*, *Corymbia maculata*, *E. elata*, or *E. smithii*. Individuals appear to occupy large hunting ranges of more than 100 km^2. They require large living trees for breeding, particularly near water with surrounding woodland /forest close by for foraging habitat. Nest sites are generally located along or near watercourses, in a tree fork or on large horizontal limbs.	Low
Daphoenositta chrysoptera Varied Sittella	V				BioNet,1, 2015, 15 km from Study Area	The Varied Sittella is sedentary and inhabits most of mainland Australia except the treeless deserts and open grasslands. Distribution in NSW is nearly continuous from the coast to the far west. The Varied Sittella's population size in NSW is uncertain but is believed to have undergone a moderate reduction over the past several decades. Inhabits eucalypt forests and woodlands, especially those containing rough-barked species and mature smooth-barked gums with dead branches, mallee and Acacia woodland. Feeds on arthropods gleaned from crevices in rough or decorticating bark, dead branches, standing dead trees and small branches and twigs in the tree canopy.	Moderate
Hirundapus caudacutus White-throated Needletail	P		V,C,J, K	L	BioNet,1, 1970, PMST - Species or species habitat likely to occur within area. Records within Locality (VBA and ALA)	Widespread in eastern and south-eastern Australia. Almost exclusively aerial, from heights of less than 1 m up to more than 1000 m above the ground. They also commonly occur over heathland but less often over treeless areas, such as grassland or swamps.	Low
Mammals							
Ornithorhynchus anatinus Platypus				L	Within 20 km of Study Area (VBA). Records from Murray River with 1 km of Study Area (ALA)	The Platypus appears to have been relatively widely distributed in waterways throughout Victoria. This species broad geographical distribution in Victoria does not seem to have changed significantly since European settlement, except for the lower Murray River downstream of Echuca, where it no longer exists. The Platypus is semiaquatic and entirely dependent on aquatic ecosystems. It occurs in a variety of water bodies including rivers, creeks, lakes, as well as man-made dams and reservoirs. Accordingly, it occupies diverse habitats with reliable surface water. Habitat characteristics considered favourable for Platypuses are generally those associated with stable banks for burrowing, the presence of benthic invertebrate prey, intact riparian vegetation, complex benthic substrate (including large woody debris), and reliable flow regimes.	Moderate
Falsistrellus tasmaniensis Eastern False Pipistrelle	V				BioNet,3, 2015, 15 km from Study Area	Prefers moist habitats, with trees taller than 20 m. Generally roosts in eucalypt hollows, but has also been found under loose bark on trees or in buildings.	Moderate
Cercartetus nanus Eastern Pygmy-possum	V				BioNet,1, 1970, 15 km from Study Area	Found in a broad range of habitats from rainforest through to wet and dry sclerophyll forest and woodland to heath, but in most areas woodlands and heath appear to be preferred. Feeds largely on nectar and pollen collected from banksias, eucalypts and bottlebrushes; an important pollinator of heathland plants such as banksias; soft fruits are eaten when flowers are unavailable. Also feeds on insects throughout the year; this feed source may be more important in habitats where flowers are less abundant such as wet forests. Shelters in tree hollows, rotten stumps, holes in the ground, abandoned bird-nests, Ringtail Possum (*Pseudocheirus peregrinus*) dreys or thickets of vegetation, (e.g. grass-tree skirts); nest-building appears to be restricted to breeding females; tree hollows are favoured but spherical nests have been found under the bark of eucalypts and in shredded bark in tree forks.	Low

Species	Act				Source / No. Records / Date of Record (20 km)		Likelihood of Occurrence
	BC	FM	EPBC	FFG			
Phascolarctos cinereus Koala	V		V		BioNet,1, 1963, 15 km from Study Area	In NSW it mainly occurs on the central and north coasts with some populations in the west of the Great Dividing Range. Inhabit eucalypt woodlands and forests. Feed on the foliage of more than 70 Eucalypt species and 30 non-Eucalypt species, but in any one area will select preferred browse species.	Low
Miniopterus orianae oceanensis Large Bent-winged Bat	V				BioNet,4, 2015, 15 km from Study Area	Occurs on east and north west coasts of Australia. Caves are the primary roosting habitat, but also use derelict mines, storm-water tunnels, buildings and other manmade structures.	Moderate
Petaurus australis Yellow-bellied Glider	V				BioNet,1, 2013, 15 km from Study Area	Found along the eastern coast to the western slopes of the Great Dividing Range, from southern Queensland to Victoria. Occur in tall mature eucalypt forest generally in areas with high rainfall and nutrient rich soils. Forest type preferences vary with latitude and elevation; mixed coastal forests to dry escarpment forests in the north; moist coastal gullies and creek flats to tall montane forests in the south. Feed primarily on plant and insect exudates, including nectar, sap, honeydew and manna with pollen and insects providing protein. Extract sap by incising (or biting into) the trunks and branches of favoured food trees, often leaving a distinctive 'V'-shaped scar.	Low
Dasyurus maculatus Spotted-tailed Quoll	V		E	L	Records within Locality (VBA)	Found in wet and dry sclerophyll forests and rainforests, and adjacent open agricultural areas. Generally associated with large expansive areas of habitat to sustain territory size. Requires hollow-bearing trees, fallen logs, small caves, rock crevices, boulder fields and rocky-cliff faces as den sites.	Low
Petrogale penicillate Brush-tailed Rock-wallaby	E		V	L	Records within Locality (VBA)	Range extends from south-east Queensland to the Grampians in western Victoria, roughly following the line of the Great Dividing Range. Occupy rocky escarpments, outcrops and cliffs with a preference for complex structures with fissures, caves and ledges, often facing north. Browse on vegetation in and adjacent to rocky areas eating grasses and forbs as well as the foliage and fruits of shrubs and trees.	Low
Threatened Ecological Communities							
Coolac-Tumut Serpentinite Shrubby Woodland	E				BioNet, DPIE	Coolac-Tumut Serpentinite Shrubby Woodland in the NSW South Western Slopes and South Eastern Highlands Bioregions	Does not occur
White Box - Yellow Box - Blakely's Red Gum Grassy Woodland	CE		CE		BioNet, DPIE	White Box - Yellow Box - Blakely's Red Gum Grassy Woodland and Derived Native Grassland in the NSW North Coast, New England Tableland, Nandewar, Brigalow Belt South, Sydney Basin, South Eastern Highlands, NSW South Western Slopes, South East Corner and Riverina Bioregions	Does not occur
Montane Peatlands and Swamps	E		E		BioNet, DPIE	Montane Peatlands and Swamps of the New England Tableland, NSW North Coast, Sydney Basin, South East Corner, South Eastern Highlands and Australian Alps bioregions	Does not occur
Windswept Feldmark in the Australian Alps Bioregion	CE				BioNet, DPIE	Windswept Feldmark in the Australian Alps Bioregion	Does not occur

Species	Act				Source / No. Records / Date of Record (20 km)		Likelihood of Occurrence
	BC	FM	EPBC	FFG			
Tablelands Snow Gum, Black Sallee, Candlebark and Ribbon Gum Grassy Woodland					BioNet, DPIE	Tablelands Snow Gum, Black Sallee, Candlebark and Ribbon Gum Grassy Woodland in the South Eastern Highlands, Sydney Basin, South East Corner and NSW South Western Slopes Bioregions	Does not occur
Alpine Sphagnum Bogs and Associated Fens			E		BioNet, DPIE	Alpine Sphagnum Bogs and Associated Fens	Does not occur
Natural Temperate Grassland of the South Eastern Highlands			CE		BioNet, DPIE	Natural Temperate Grassland of the South Eastern Highlands	Does not occur
Migratory - Terrestrial							
Hirundapus caudacutus White-throated Needletail			V		Species or species habitat likely to occur within area	See above	Low
Monarcha melanopsis Black-faced Monarch					Species or species habitat known to occur within area	Wet forest specialist, found mainly in rainforest and wet sclerophyll forest, especially in sheltered gullies and slopes with a dense understorey of ferns and/or shrubs.	Low. No suitable rainforest or similar closed forests habitat occurs within the Study Area
Motacilla flava Yellow Wagtail					Species or species habitat may occur within area	Eucalypt forest and woodlands, at high elevations when breeding. They are particularly common in tall wet sclerophyll forest, often in gullies or along water courses. In woodlands they prefer open, grassy woodland types. During migration, habitat preferences expand, with the species recorded in most wooded habitats except rainforests. Wintering birds in northern Qld will use rainforest - gallery forests interfaces, and birds have been recorded wintering in mangroves and paperbark swamps.	Low. No suitable rainforest or similar closed forests habitat occurs within the Study Area.

Species	Act				Source / No. Records / Date of Record (20 km)		Likelihood of Occurrence
	BC	FM	EPBC	FFG			
Myiagra cyanoleuca Satin Flycatcher					Species or species habitat known to occur within area	Widespread in eastern Australia and vagrant to New Zealand. Inhabit heavily vegetated gullies in eucalypt-dominated forests and taller woodlands, and on migration, occur in coastal forests, woodlands, mangroves and drier woodlands and open forests.	Low
Rhipidura rufifrons Rufous Fantail					Species or species habitat likely to occur within area	Moist, dense habitats, including mangroves, rainforest, riparian forests and thickets, and wet eucalypt forests with a dense understorey. When on passage a wider range of habitats are used including dry eucalypt forests and woodlands and Brigalow shrublands.	Low
Migratory - Wetland							
Actitis hypoleucos Common Sandpiper					Species or species habitat may occur within area	The species utilises a wide range of coastal wetlands and some inland wetlands, with varying levels of salinity, and is mostly found around muddy margins or rocky shores and rarely on mudflats. The Common Sandpiper has been recorded in estuaries and deltas of streams, as well as on banks farther upstream; around lakes, pools, billabongs, reservoirs, dams and claypans, and occasionally piers and jetties. The muddy margins utilised by the species are often narrow, and may be steep. The species is often associated with mangroves, and sometimes found in areas of mud littered with rocks or snags.	Low
Calidris acuminata Sharp-tailed Sandpiper					Species or species habitat may occur within area	In Australasia, the Sharp-tailed Sandpiper prefers muddy edges of shallow fresh or brackish wetlands, with inundated or emergent sedges, grass, saltmarsh or other low vegetation. This includes lagoons, swamps, lakes and pools near the coast, and dams, waterholes, soaks, bore drains and bore swamps, saltpans and hypersaline salt lakes inland.	Low
Calidris ferruginea Curlew Sandpiper			CE		Species or species habitat may occur within area	See above	Low
Calidris melanotos Pectoral Sandpiper					Species or species habitat may occur within area	In Australasia, the Pectoral Sandpiper prefers shallow fresh to saline wetlands. The species is found at coastal lagoons, estuaries, bays, swamps, lakes, inundated grasslands, saltmarshes, river pools, creeks, floodplains and artificial wetlands.	Low
Gallinago hardwickii Latham's Snipe / Japanese Snipe					Species or species habitat may occur within area	Occurs in permanent and ephemeral wetlands up to 2000 m above sea-level. They usually inhabit open, freshwater wetlands with low, dense vegetation (e.g. swamps, flooded grasslands or heathlands, around bogs and other water bodies). However, they can also occur in habitats with saline or brackish water, in modified or artificial habitats, and in habitats located close to humans or human activity.	Low
Numenius madagascariensis Eastern Curlew / Far Eastern Curlew			CE		Species or species habitat may occur within area	See above	Low

i) Consideration Under Significant Impact Criteria (EPBC Act)

<u>Murray Cod, listed as vulnerable under the EPBC Act</u>

a) Long-term decrease in the size of local and regional populations

Murray Cod are endemic to the Murray-Darling River system and historically were present throughout most of this system, except for the upper reaches of tributaries. This species is still present throughout most of its historic range.

The Proposal does not include elements that would result in the direct modification of any more than negligible (no more than 10s m^2 beneath the bridge piles and construction platform) potential Murray Cod habitat. There would also be minimal snag removal as part of the Proposal, and the Proposal offers the opportunity to place additional wood debris in the river. Several water quality control measures associated with minimising erosion and sediment release are inherent in the Proposal design and are outlined in this assessment. These would prevent the release of sediment laden water to the Murray River. The Proposal is also not expected to exacerbate the spread or proliferation of pest fish already present in the river.

Given this, the Proposal is not expected to result in a reduction of the population size of Murray Cod.

b) Reduced area of occupancy

Murray Cod have been found in a variety of habitats, including clear rocky watercourses, slow flowing, turbid rivers, and billabongs. This fish is usually found in sheltered areas, where there is extensive cover in the form of large rocks, snags, overhanging vegetation or other woody structures. Juveniles have been found in the main river channel. Murray Cod are thought to be sedentary species, remaining in a specific hole, snag or area of the river until spring-summer, when they undertake extensive upstream spawning migrations. After spawning, the adults return to their territory downstream.

As described above, the Proposal does not include elements that would result in the direct modification of any more than negligible amount of potential Murray Cod habitat. There would also be no snag removal as part of the Proposal. Together with successful implementation of the control measures inherent in the Proposal design and described in this assessment, the Proposal is not expected to result in a reduction in the potential area of occupancy of Murray Cod.

c) Fragmentation of an existing population into two or more populations

The Proposal would not create a temporary or permanent obstruction to fish passage and would not fragment any population of Murray Cod present in this section of the Murray River.

d) Adverse effects on habitat that is critical to the survival of the species

The habitat provided by the section of the Murray River within the Study Area is comparable to that upstream and downstream. While it would be expected to provide habitat features key to survival (such as wood debris that provides a surface for attachment of adhesive eggs), similar habitat features would be abundant throughout nearby sections of river. Thus, any impact on such habitat due to the Proposal would be expected to result in negligible overall impact to Murray Cod habitat, including any critical habitat.

e) Disrupt the breeding cycle of a population

Murray Cod spawn in late spring and early summer. Spawning has been reported to occur in the vicinity of submerged rocks and in depressions excavated in clay banks. The eggs are adhesive and are deposited as a large mat on the spawning surface.

Removal of snags and potential sedimentation in waterways could disrupt the breeding cycle by removing or smothering important breeding substratum. However, there would be minimal snag removal and sediment mobilisation as a result of the Proposal and disruptions of breeding cycles are not expected.

f) Modify, destroy, remove, isolate or decrease the availability and or quality of habitat to the extent that the species is likely to decline

As described above, the Proposal does not include elements that would result in the direct modification of any more than a negligible amount of potential Murray Cod habitat. There would also be minimal snag removal as part of the Proposal and the Proposal offers the opportunity to place additional wood debris in the river. Together with successful implementation of the control measures inherent in the Proposal design and described in this assessment, the Proposal is not expected to result in a reduction in the potential area of occupancy of Murray Cod.

g) Result in invasive species that are harmful becoming established in the threatened species habitat

Invasive fish, including redfin perch and eastern gambusia, are currently present in the Murray River. The Proposal does not include any mechanisms that would result in the proliferation of these invasive fish or introduce other additional invasive species to the Murray River.

h) Introduce disease that may cause the species to decline

The construction and operation of the Proposal does not include any mechanisms that would introduce aquatic disease.

i) Interfere with the recovery of the species

The overall objective of the National Recovery Plan for Murray Cod National Murray Cod Recovery Team (2010b) is to have self-sustaining populations managed for conservation, fishing and culture. The potential threats posed by the Proposal activities would be unlikely to interfere with the recovery of the species. This is due the very localised and temporary nature of the potential impacts identified and associated with the Proposal.

Flathead Galaxias listed as critically endangered under the EPBC Act

a) Long-term decrease in the size of local and regional populations

Flathead Galaxias are found in still or slow moving water bodies such as wetlands and lowland streams. They have been associated with a range of habitats including rock and sandy bottoms and aquatic vegetation. Flathead Galaxias spawn in spring and lay slightly adhesive demersal eggs (NSW DPI 2021a). Threats to flathead Galaxias include:

- Spawning or recruitment failure due to water regulation and cold water release from impoundments
- Loss of or altered connectivity between rivers and floodplains
- Loss of or degradation of habitats in lakes, wetlands and billabongs such as the loss of aquatic vegetation0
- Predatory by and competition with introduced species such as Carp (*Cyprinus carpio*), Redfin Perch and Eastern Gambusia (*Gambusia holbrooki*)
- Construction of weirs and dams without fishways create barriers to migration and recolonisation
- Pollution from domestic, agricultural and industrial sources.

The Proposal does not include elements that would result in the direct modification of any more than negligible (no more than 10s m^2 beneath the bridge piles and construction platform) potential flathead Galaxias habitat. There would also be minimal snag removal as part of the Proposal, and the Proposal offers the opportunity to place additional wood debris in the river. Several water quality control measures associated with minimising erosion and sediment release are inherent in the Proposal design and are outlined in this assessment. These would prevent the release of sediment laden water to the Murray River. The Proposal is also not expected to exacerbate the spread or proliferation of pest fish already present in the river.

b) Reduced area of occupancy

Flathead Galaxias is known from the southern part of the Murray Darling Basin. They have been recorded in the Macquarie, Lachlan, Murrumbidgee and Murray Rivers in NSW. Despite extensive scientific sampling over the past 15 years there have been very few recorded sightings of Flathead Galaxias. The species is now only known from the upper Murray River near Tintaldra and wetland areas near Howlong (NSW DPI 2021).

As described above, the Proposal does not include elements that would result in the direct modification of any more than negligible amount of potential flathead Galaxias habitat. There would also be no snag removal as part of the Proposal. Together with successful implementation of the control measures inherent in the Proposal design and described in this assessment, the Proposal is not expected to result in a reduction in the potential area of occupancy of flathead Galaxias.

c) Fragmentation of an existing population into two or more populations

The Proposal would not create a temporary or permanent obstruction to fish passage and would not fragment any population of Flathead Galaxias present in this section of the Murray River.

d) Adverse effects on habitat that is critical to the survival of the species

The habitat provided by the section of the Murray River within the Study Area is comparable to that upstream and downstream. While it would be expected to provide habitat features key to survival (such as wood debris that provides a surface for attachment of adhesive eggs), similar habitat features would be abundant throughout nearby sections of river. Thus, any impact on such habitat due to the Proposal would be expected to result in negligible overall impact to flatheaded Galaxias habitat, including any critical habitat.

e) Disrupt the breeding cycle of a population

Flathead Galaxias spawn in spring and lay slightly adhesive demersal eggs. Removal of snags and potential sedimentation in waterways could disrupt the breeding cycle by removing or smothering

important breeding substratum. However, there would be minimal snag removal and sediment mobilisation as a result of the Proposal and disruptions of breeding cycles are not expected.

f) Modify, destroy, remove, isolate or decrease the availability and or quality of habitat to the extent that the species is likely to decline

As described above, the Proposal does not include elements that would result in the direct modification of any more than a negligible amount of potential flathead Galaxias habitat. There would also be minimal snag removal as part of the Proposal and the Proposal offers the opportunity to place additional wood debris in the river. Together with successful implementation of the control measures inherent in the Proposal design and described in this assessment, the Proposal is not expected to result in a reduction in the potential area of occupancy of Murray Cod.

g) Result in invasive species that are harmful becoming established in the threatened species habitat

Invasive fish, including redfin perch and eastern gambusia, are currently present in the Murray River. The Proposal does not include any mechanisms that would result in the proliferation of these invasive fish or introduce other additional invasive species to the Murray River.

h) Introduce disease that may cause the species to decline

The construction and operation of the Proposal does not include any mechanisms that would introduce aquatic disease.

i) Interfere with the recovery of the species

Several recovery actions for flathead Galaxias have been identified (NSW DPI 2021b). Those relevant to the Proposal relate primarily to habitat rehabilitation. In particular, the rehabilitation restoration and enhancement of riparian vegetation and implementation of sediment erosion and control measures. The Proposal includes several measures that would contribute to these recovery actions. The Proposal would not interfere with these or the other recovery actions identified.

ii) Assessments of Significance (AoSs) under the FM Act

<u>Flathead Galaxias listed as critically endangered under the FM Act</u>

a) In the case of a threatened species, whether the action proposed is likely to have an adverse effect on the life cycle of the species such that a viable local population of the species is likely to be placed at risk of extinction

Flathead Galaxias spawn in spring and lay slightly adhesive demersal eggs (NSW DPI 2021a). The eggs hatch after 9 days at temperatures between 9-14°C. Fry are 6-8 mm long after hatching. Individuals probably mature in their first year (approximately 80 mm long).

The Proposal does not include elements that would result in the direct modification of any more than negligible (no more than 10s m^2 beneath the bridge piles and construction platform) potential flathead Galaxias habitat. There would also be minimal snag removal as part of the Proposal, and the Proposal offers the opportunity to place additional wood debris in the river. Several water quality control measures associated with minimising erosion and sediment release are inherent in the Proposal design and are outlined in this assessment. These would prevent the release of sediment laden water to the Murray River. The Proposal is also not expected to exacerbate the spread or proliferation of pest fish already present in the river.

b) In the case of an endangered population, whether the action proposed is likely to have an adverse effect on the life cycle of the species that constitutes the endangered population such that a viable local population of the species is likely to be placed at risk of extinction

Not applicable

(c) In the case of an endangered ecological community or critically endangered ecological community, whether the action proposed:

> ***(i) is likely to have an adverse effect on the extent of the ecological community such that its local occurrence is likely to be placed at risk of extinction, or***
>
> ***(ii) is likely to substantially and adversely modify the composition of the ecological community such that its local occurrence is likely to be placed at risk of extinction***

Not applicable

d) In relation to the habitat of a threatened species, population or ecological community:

> ***(i) the extent to which habitat is likely to be removed or modified as a result of the action proposed,***
>
> ***(ii) whether an area of habitat is likely to become fragmented or isolated from other areas of habitat as a result of the proposed action, and***
>
> ***(iii) the importance of the habitat to be removed, modified, fragmented or isolated to the long-term survival of the species, population or ecological community in the locality***

Flathead Galaxias is known from the southern part of the Murray Darling Basin. They have been recorded in the Macquarie, Lachlan, Murrumbidgee and Murray Rivers in NSW. Despite extensive scientific sampling over the past 15 years there have been very few recorded sightings of Flathead Galaxias. The species is now only known from the upper Murray River near Tintaldra and wetland areas near Howlong (NSW DPI 2021).

As described above, the Proposal does not include elements that would result in the direct modification of any more than negligible amount of potential flathead Galaxias habitat. There would also be no snag removal as part of the Proposal. Together with successful implementation of the control measures inherent in the Proposal design and described in this assessment, the Proposal is not expected to result in a reduction in the potential area of occupancy of flathead Galaxias.

(e) Whether the action proposed is likely to have an adverse effect on critical habitat (either directly or indirectly)

Critical habitat refers only to those areas listed in the Register of Critical Habitat kept by NSW DPI (Fisheries). This question is not applicable, as no critical habitat has been listed for flathead Galaxias.

In any case, the Proposal does not include elements that would result in the direct modification of any more than negligible amount of potential flathead Galaxias habitat. There would also be no snag removal as part of the Proposal. Together with successful implementation of the control measures inherent in the Proposal design and described in this assessment, the Proposal is not expected to result in a reduction in the potential area of occupancy of flathead Galaxias.

(f) whether the action proposed is consistent with the objectives or actions of a recovery plan or threat abatement plan

Several recovery actions for flathead Galaxias have been identified (NSW DPI 2021b). Those relevant to the Proposal relate primarily to habitat rehabilitation. In particular, the rehabilitation restoration and enhancement of riparian vegetation and implementation of sediment erosion and control measures. The Proposal includes several measures that would contribute to these recovery actions. The Proposal would not interfere with these or the other recovery actions identified.

(g) Whether the action proposed constitutes or is part of a key threatening process or is likely to result in the operation of, or increase the impact of, a key threatening process

The Proposal would not result in the net removal of wood debris, further degradation of riparian vegetation associated with the Murray River, or impact the flow regime in the Murray River and would not exacerbate associated KTPs.

<u>Southern Pygmy Perch listed as endangered under the FM Act</u>

a) In the case of a threatened species, whether the action proposed is likely to have an adverse effect on the life cycle of the species such that a viable local population of the species is likely to be placed at risk of extinction

Southern Pygmy Perch is found in well vegetated, slow-flowing or still waters including streams, lakes, billabongs and other types of wetlands (NSW DPI, 2014). Breeding occurs from late winter to early spring in response to rising water temperatures. During the breeding season, males defend a territory in which, after a courtship display, spawning takes place and up to 4,000 small, transparent, non-adhesive eggs which are scattered over vegetation or rocks on the bottom.

The causes of the decline in Southern Pygmy Perch include predation by introduced fish such as gambusia and redfin perch; habitat loss including riparian vegetation and floodplain wetland habitat and modification of flows through river regulation leading to drying and fragmentation of wetlands and spawning areas.

The Proposal is also not expected to exacerbate the spread or proliferation of pest fish already present in the river. The Proposal would not impact fish passage or the flow regime in the Murray River. Thus, the Proposal is not expected to impact the lifecycle of the species. Several erosion and sediment controls are inherent in the Proposal design and are outlined in this assessment. These would prevent the release of sediment laden water to the Murray River.

b) In the case of an endangered population, whether the action proposed is likely to have an adverse effect on the life cycle of the species that constitutes the endangered population such that a viable local population of the species is likely to be placed at risk of extinction

Not applicable

(c) In the case of an endangered ecological community or critically endangered ecological community, whether the action proposed:

> ***(i) is likely to have an adverse effect on the extent of the ecological community such that its local occurrence is likely to be placed at risk of extinction, or***
>
> ***(ii) is likely to substantially and adversely modify the composition of the ecological community such that its local occurrence is likely to be placed at risk of extinction***

Not applicable

d) In relation to the habitat of a threatened species, population or ecological community:

> ***(i) the extent to which habitat is likely to be removed or modified as a result of the action proposed,***
>
> ***(ii) whether an area of habitat is likely to become fragmented or isolated from other areas of habitat as a result of the proposed action, and***
>
> ***(iii) the importance of the habitat to be removed, modified, fragmented or isolated to the long-term survival of the species, population or ecological community in the locality***

Southern Pygmy Perch is found in well vegetated, slow-flowing or still waters including streams, lakes, billabongs and other types of wetlands. A small area (a few 10s m^2) of the Murray River would be modified by bridge demolition and construction. The amount of habitat that would be modified would be negligible relative the amount of undisturbed creek bed present elsewhere. The Proposal would also not impact fish passage in the Murray River. Thus, impacts to Southern Pygmy Perch habitat associated with the construction and operation of the bridge are not expected. The rehabilitation of riparian vegetation and placement of wood debris in the river offers the opportunity to improve the habitat of this species in this section of the Murray River.

(e) Whether the action proposed is likely to have an adverse effect on critical habitat (either directly or indirectly)

There are no critical habitats for Southern Pygmy Perch listed under the FM Act.

(f) whether the action proposed is consistent with the objectives or actions of a recovery plan or threat abatement plan

No recovery plan or threat abatement plan for Southern Pygmy Perch currently exist.

A Priorities Action Statement exists for the Southern Pygmy Perch (NSW DPI 2021). The recovery objectives and actions of the PAS mostly relate to conservation works, research and monitoring, agency consultation and community engagement. Objectives that directly relate to the Proposal include objectives for habitat rehabilitation.

All of the mitigation actions to minimise the risk and monitor for pests and diseases would be consistent with the recovery actions of the PAS.

(g) Whether the action proposed constitutes or is part of a key threatening process or is likely to result in the operation of, or increase the impact of, a key threatening process

The Proposal would not result in the net removal of wood debris, further degradation of riparian vegetation associated with the Murray River, or impact the flow regime in the Murray River and would not exacerbate associated KTPs.

Murray Crayfish listed as vulnerable under the FM Act

a) In the case of a threatened species, whether the proposed development or activity is likely to have an adverse effect on the life cycle of the species such that a viable local population of the species is likely to be placed at risk of extinction.

The Murray Crayfish are endemic to the Murray-Darling Basin, including the Murrumbidgee River and many of its tributaries (NSW DPI 2019). The Murray Crayfish population has suffered a significant decline over the last 50 years, with severe flooding, river regulation and various land practices causing high mortality and slow recovery (Lintermans 2019; NSW DPI, 2019). They prefer cool, well oxygenated, flowing water and are found in a range of environments, such as pasture-lands to sclerophyll forest. They are long-lived and slow-growing, with females and males taking up to ten and four years to reach sexual maturity, respectively, and can live for up to 28 years. Murray Crayfish are opportunistic feeders, with a wide dietary range and are able to feed on decaying aquatic plant matter, dead fish and other animals. Threats to Murray Crayfish include sedimentation and anoxic conditions such as black water events.

Several erosion and sediment controls are inherent in the Proposal design and are outlined in this assessment. These would prevent the release of sediment laden water to the Murray River. The Proposal is also not expected to exacerbate the spread or proliferation of pest fish already present in the river. Thus, the Proposal is not expected to impact the lifecycle of the species.

b) In the case of an endangered population, whether the action proposed is likely to have an adverse effect on the life cycle of the species that constitutes the endangered population such that a viable local population of the species is likely to be placed at risk of extinction

Not applicable

(c) In the case of an endangered ecological community or critically endangered ecological community, whether the action proposed:

> ***(i) is likely to have an adverse effect on the extent of the ecological community such that its local occurrence is likely to be placed at risk of extinction, or***
>
> ***(ii) is likely to substantially and adversely modify the composition of the ecological community such that its local occurrence is likely to be placed at risk of extinction***

Not applicable

d) In relation to the habitat of a threatened species, population or ecological community:

> ***(i) the extent to which habitat is likely to be removed or modified as a result of the action proposed,***
>
> ***(ii) whether an area of habitat is likely to become fragmented or isolated from other areas of habitat as a result of the proposed action, and***
>
> ***(iii) the importance of the habitat to be removed, modified, fragmented or isolated to the long-term survival of the species, population or ecological community in the locality***

A small area (a few 10 s m^2)of the Murray River would be modified by bridge demolition and construction. The amount of habitat that would be modified would be negligible relative the amount of undisturbed creek bed present elsewhere. Thus, impacts to Murray Crayfish habitat associated with the construction and operation of the bridge are not expected. The rehabilitation of riparian vegetation and placement of wood debris in the river offers the opportunity to improve the habitat of this species in this section of the Murray River.

e) Whether the proposed development or activity is likely to have an adverse effect on any critical habitat (either directly or indirectly).

Critical habitat refers only to those areas listed in the Register of Critical Habitat kept by NSW DPI (Fisheries). This question is not applicable, as no critical habitat has been listed for the Murray crayfish.

the Proposal does not include elements that would result in the direct modification of any more than negligible amount of potential flathead Galaxias habitat. There would also be no snag removal as part of the Proposal. Together with successful implementation of the control measures inherent in the Proposal design and described in this assessment, the Proposal is not expected to result in a reduction in the potential area of occupancy of Murray crayfish.

f) Whether the action proposed is consistent with the objectives or actions of a recovery plan or threat abatement plan.

No recovery plans have been developed for the Murray crayfish. However, Priority Action Statement for Murray Crayfish (NSW DPI, 2018) identifies recovery actions in relation to Murray crayfish. These mostly surround conservation works, research and monitoring, agency consultation and community engagement. Actions that are related to the Proposal project mostly include habitat rehabilitation. The placement of wood debris in the Murray River and rehabilitation of nearby riparian vegetation would enhance habitat for Murry Crayfish in this section of the Murray River.

(g) Whether the action proposed constitutes or is part of a key threatening process or is likely to result in the operation of, or increase the impact of, a key threatening process

The Proposal would not result in the net removal of wood debris, further degradation of riparian vegetation associated with the Murray River, or impact the flow regime in the Murray River and would not exacerbate associated KTPs.

iii) Tests of Significance (ToSs) under the BC Act

Microbat Species

- ***Southern Myotis listed as vulnerable under the BC Act***
- ***Eastern Coastal Free-tailed Bat listed as vulnerable under the BC Act***

(a) In the case of a threatened species, whether the proposed development or activity is likely to have an adverse effect on the life cycle of the species such that a viable local population of the species is likely to be placed at risk of extinction.

The Proposal will impact land considered to be modified/disturbed condition as a result of existing infrastructure and community use. The demolition of the existing bridge structure is included as part of the Proposal which may provide sub-optimal habitat for microbat species. Appropriate mitigation and management measures would be implemented to avoid negative potential impacts to local terrestrial ecology. Potential foraging and/or roosting habitat within the Study Area would only be used intermittently and is not considered a key resource for these species. Therefore, it is unlikely the Proposal would result in an adverse effect on the life cycle of this species, nor would a local population of these species be placed at risk of extinction.

Night works would be limited and appropriate noise management measures would be implemented to limit indirect impacts.

(b) In the case of an endangered ecological community or critically endangered ecological community, whether the proposed development or activity:

(i) Is likely to have an adverse effect on the extent of the ecological community such that its local occurrence is likely to be placed at risk of extinction, or

(ii) Is likely to substantially and adversely modify the composition of the ecological community such that its local occurrence is likely to be placed at risk of extinction.

Not applicable to threatened species.

(c) In relation to the habitat of a threatened species or ecological community:

(i) The extent to which habitat is likely to be removed or modified as a result of the proposed development or activity; and

(ii) Whether an area of habitat is likely to become fragmented or isolated from other areas of habitat as a result of the proposed development or activity; and

(iii) The importance of the habitat to be removed, modified, fragmented or isolated to the long-term survival of the species or ecological community in the locality.

Indirect impacts such as noise disturbance would be temporary in nature. The project is unlikely to fragment or isolate the available habitat for these species within the Study Area. Night works would be limited and appropriate noise management measures would be implemented to limit indirect impacts.

As above, the Proposal occupies predominately areas of disturbance with the exception of the demolition of the existing bridge structure and minor clearances of native vegetation on the eastern bank. Appropriate mitigation and management measures would be implemented to avoid negative potential impacts to local ecology. This would have minimal impact on the available habitat present for these species.

(d) Whether the proposed development or activity is likely to have an adverse effect on any declared area of outstanding biodiversity value (either directly or indirectly).

At the time of writing, four Areas of Outstanding Biodiversity Value (AOBV) have been declared:

- Gould's Petrel - critical habitat declaration.
- Little penguin population in Sydney's North Harbour - critical habitat declaration.
- Mitchell's Rainforest Snail in Stotts Island Nature Reserve - critical habitat declaration.
- Wollemi Pine - critical habitat declaration.

Of the above listed AOBV, the Little penguin population in Sydney's North Harbour - critical habitat is located closest to the Study Area. However, as the Study Area is located over 4000 km from the AOBV, future development would not be expected to have any direct or indirect effect on this or any declared AOBV.

(e) Whether the proposed development or activity is or is part of a key threatening process or is likely to increase the impact of a key threatening process.

The proposed project would or may constitute, introduce or exacerbate the following KTPs relevant to this species:

- Removal of native vegetation
- Removal of dead wood and dead trees
- Loss or disturbance of roosting sites

The Proposal will be impacting lands that are considered to be modified/disturbed condition as a result of existing infrastructure and community use. The demolition of the existing bridge structure is included as part of the Proposal which may provide sub-optimal habitat for microbat species. However, these KTPs arising from the project are not considered significant on the local scale. Appropriate mitigation and management measures would be implemented to avoid negative potential impacts to local ecology. Indirect impacts such as noise disturbance would be temporary in nature.

Minor amounts of native vegetation have been identified for removal as part of the Proposal. Dead trees or dead wood may be removed as part of the proposed works. It is important to assess these for hollows and potential traces of habitation of native fauna. It is also important to assess the existing bridge structure for traces of microbat habitation and remove the structure with care.

Conclusion

The Proposal would predominately occupy already disturbed land and appropriate mitigation and management measures would be implemented to avoid negative potential impacts to local ecology. The demolition of the exiting bridge structure should be completed with care and assessed for microbat habitation. Night works would be limited and appropriate noise management measures would be implemented to limit indirect impacts.

It is considered unlikely that the project would have a significant impact on the local population of these species.

Ave Species

- ***Black Falcon (Falco subniger) listed as vulnerable under the BC Act;***
- ***Little Eagle (Hieraaetus morphnoides) listed as vulnerable under the BC Act and threatened under the FFG Act***
- ***Gang-gang Cockatoo (Callocephalon fimbriatum) listed as vulnerable under the BC Act***
- ***Varied Sittella (Daphoenositta chrysoptera) listed as vulnerable under the BC Act***

(a) In the case of a threatened species, whether the proposed development or activity is likely to have an adverse effect on the life cycle of the species such that a viable local population of the species is likely to be placed at risk of extinction.

The Proposal will be impacting lands that are considered to be modified/disturbed condition as a result of existing infrastructure and community use. A small amount of native vegetation would be removed as part of the Proposal. Appropriate mitigation and management measures would be implemented to avoid negative potential impacts to local ecology. Potential foraging habitat within the Study Area would only be used intermittently and is not considered a key resource for these species. Therefore, it is unlikely the Proposal would result in an adverse effect on the life cycle of these species, nor would a local population of this species be placed at risk of extinction.

(b) In the case of an endangered ecological community or critically endangered ecological community, whether the proposed development or activity:

(i) Is likely to have an adverse effect on the extent of the ecological community such that its local occurrence is likely to be placed at risk of extinction, or

(ii) Is likely to substantially and adversely modify the composition of the ecological community such that its local occurrence is likely to be placed at risk of extinction.

Not applicable to threatened species.

(c) In relation to the habitat of a threatened species or ecological community:

(i) The extent to which habitat is likely to be removed or modified as a result of the proposed development or activity; and

(ii) Whether an area of habitat is likely to become fragmented or isolated from other areas of habitat as a result of the proposed development or activity; and

(iii) The importance of the habitat to be removed, modified, fragmented or isolated to the long-term survival of the species or ecological community in the locality.

Indirect impacts such as noise disturbance would be temporary in nature. The project is unlikely to fragment or isolate the available habitat for this species within the Study Area. Noise management measures would be implemented to limit indirect impacts.

As above, the Proposal occupies predominately areas of disturbance with the exception of minor clearing works of native vegetation on the eastern banks of the Murray River. Appropriate mitigation and management measures would be implemented to avoid negative potential impacts to local ecology. This would have minimal impact on the available habitat present for these species.

(d) Whether the proposed development or activity is likely to have an adverse effect on any declared area of outstanding biodiversity value (either directly or indirectly).

At the time of writing, four Areas of Outstanding Biodiversity Value (AOBV) have been declared:

- Gould's Petrel - critical habitat declaration.

- Little penguin population in Sydney's North Harbour - critical habitat declaration.
- Mitchell's Rainforest Snail in Stotts Island Nature Reserve - critical habitat declaration.
- Wollemi Pine - critical habitat declaration.

Of the above listed AOBV, the Little penguin population in Sydney's North Harbour - critical habitat is located closest to the Study Area. However, as the Study Area is located over 4000 km from the AOBV, future development would not be expected to have any direct or indirect effect on this or any declared AOBV.

(e) Whether the proposed development or activity is or is part of a key threatening process or is likely to increase the impact of a key threatening process.

The proposed project would or may constitute, introduce or exacerbate the following KTPs relevant to this species:

- Removal of native vegetation
- Removal of dead wood and dead trees

The project would result in the removal of minor amounts of native vegetation and the potential for the removal of dead trees that may be used for foraging potential. However, these KTPs arising from the project are not considered significant on the local scale. Appropriate mitigation and management measures would be implemented to avoid negative potential impacts to local ecology. Indirect impacts such as noise disturbance would be temporary in nature.

Minor amounts of native vegetation have been identified for removal as part of the Proposal. Dead trees or dead wood may be removed as part of the proposed works. It is important to assess these for hollows and potential traces of habitation of native fauna.

Conclusion

The Proposal would predominately occupy already disturbed land and appropriate mitigation and management measures would be implemented to avoid negative potential impacts to local ecology. A small amount of native vegetation has been identified within the construction area and would be cleared as a result of the Proposal.

It is considered unlikely that the project would have a significant impact on the local population of these species.

Appendix E

Statement of Heritage Impact

AUSTRAL ARCHAEOLOGY PTY LTD
ABN: 55 629 860 975
Info@australarch.com.au
www.australarchaeology.com.au

AUSTRAL ARCHAEOLOGY

TOWONG BRIDGE REPLACEMENT PROJECT

TOWONG, NEW SOUTH WALES

STATEMENT OF HERITAGE IMPACT

FINAL REPORT

CARDNO ON BEHALF OF TRANSPORT FOR NSW

Cardno

20 July 2021

DOCUMENT INFORMATION

Project:	Towong Bridge, Towong, NSW
Services required:	Statement of Heritage Impact
Client:	Cardno on behalf of Transport for NSW
Prepared by:	Miles Robson & Ricardo Servin
Project number:	21016

DOCUMENT HISTORY AND APPROVAL STATUS

Version No.	Version Type	Issue Date	Authored by	Approved by	Date Approved
1	Draft	08/02/2021	MR	DM	08/02/2021
2	Draft	01/03/2021	MR	AJB	01/03/2021
3	Draft	28/04/2021	RS	DM	29/04/2021
4	Final	04/05/2021	RS	DM	04/05/2021
5	Final	20/07/2021	RS	AJB	20/07/2021

DISTRIBUTION OF COPIES

Version No.	Quantity	Issue date	Issued to
1	1	29/04/2021	Cardno
2	1	04/05/2021	Cardno
5	1	20/07/2021	Cardno

Copyright and Moral Rights

No part of this document may be reproduced or distributed in any form or by any means without prior permission from a representative of Austral Archaeology Pty Ltd. Austral Archaeology Pty Ltd also reserves the right to use documents and materials produced for this project for future presentations or publications, if required.

In the preparation of this report historical sources and other reference materials are acknowledged in text citations and in a separate section at the end of the report. Reasonable effort has been made to acknowledge and obtain permission from the relevant copyright owners.

EXECUTIVE SUMMARY

Austral Archaeology Pty Ltd (Austral) has been commissioned by Cardno on behalf of Transport for NSW (TfNSW) to prepare a Statement of Heritage Impact (SoHI) for the Towong Bridge Replacement Project located on Towong Road at the border of New South Wales (NSW) and Victoria.

The study area lies within the Snowy Valleys Council Local Government Area (LGA). The location of the study area is shown in Figure 1.1, Figure 1.2 and Figure 1.3. The study area is located within the parish of Bringenbrong in the County of Selwyn.

This report will form part of a Review of Environmental Factors (REF) that is being prepared by Cardno on behalf of TfNSW under Part 5.1 of the *Environmental Planning and Assessment Act 1979* (EPA Act).

The purpose of this SoHI is to undertake historical research of the study area which will be utilised to examine the proposed works in light of the heritage values and significance of the study area and provide suitable management recommendations.

PROPOSED WORKS

The Towong Bridge piers and supports are in poor structural condition, and in 2016 Roads and Maritime Services (RMS), the precursor to TfNSW, installed temporary pier and abutment supports in order to extend the life of the bridge by up to 5 years. As stated in the REF prepared by RMS for the temporary repair works in 2016, the extended life of the current bridge however was largely dependent on the ability of the bridge substructure to resist regular flooding events that are common on the Upper Murray River (Roads and Maritime Services 2016).

In early 2020, a concept design was prepared by SMEC on behalf of RMS for the replacement of the existing bridge with a new bridge on the same alignment. The proposed option for the new bridge is the construction of an 11 metre wide, 3-span Super-T-girder bridge on the current alignment incorporating 2 traffic lanes and a 1.8 metre wide pedestrian walkway (SMEC 2020).

SIGNIFICANCE OF ITEM

Towong Bridge is of local historical significance as it represents a major piece of road infrastructure on an important local transport route. Following its construction by the Department of Main Roads in 1938, Towong Bridge has provided a connecting link for those travelling between local towns in NSW and Victoria. The structure is widely recognised by the local community as a landmark and a structure of interest that provides a link between townships as well as 2 different states.

Towong Bridge consists of rare technical significance, representing the only functioning timber beam bridge that crosses the Murray River.

While Towong Bridge is considered to meet Heritage Significant Criteria on a local level the bridge piers and supports are in poor structural conditions.The piers are severely decayed and the concrete wraps are essentially non-structural thereby compromising the piers structural capacity. In accordance with the *Timber Truss Road Bridges* conservation strategies (Roads and Traffic Authority 2011), this timber truss bridge is no longer suitable to be retained and is considered a potential safety risk. Therefore, the dilapidated conditions of the bridge have had detrimental effects on the heritage value of the item.

CONCLUSIONS

In 2020, a concept design for the replacement of Towong Bridge was prepared as a result of the poor structural condition of the existing bridge. This entails the removal of the existing bridge and the construction of a new bridge along the same alignment crossing the Murray River.

Given the severity of the deterioration of the pier supports, alternative options to maintain the function of the existing bridge did not meet safety standards. As such, the removal of Towong Bridge and the construction of a new bridge are determined as critical for the safety of local and interstate travellers.

Following a review of the historical background of the study area and the proximity of the study area to the level of the river, no historical archaeological remains are likely to occur in the area of works.

To conclude, the proposed project is considered consistent with the requirements outlined in the *Timber Truss Road Bridges* conservation strategies (Roads and Traffic Authority 2011) and is therefore acceptable from a heritage standpoint.

RECOMMENDATIONS

It is recommended that:

1. The development can proceed and is considered consistent with the strategic approach to conservation with regards to timber bridges being managed by TfNSW (Roads and Traffic Authority 2011).
2. Prior to the commencement of any construction or demolition works, the results of the site inspection should be outlined in the form of an archival recording prepared in accordance with Heritage Branch guidelines *How to Prepare Archival Records for Heritage Items and Photographic Recording of Heritage Items Using Film or Digital Capture* (Heritage Office 1998).
3. To ensure that impacts to known or unknown heritage values are mitigated during construction, all construction workers must be subject to an induction that details the kinds of historical relics, structures or deposits that may be encountered during the works and what the process should be if these are encountered. As such, the *Roads and Maritime Services: Standard Operating Procedure: Unexpected Archaeological Finds Procedure* (Roads and Maritime Services 2015) should be followed. In the event that suspected relics are encountered, all works in the immediate vicinity are to cease immediately and the Heritage Division be notified in accordance with Section 146 of the *NSW Heritage Act 1977*. A qualified archaeologist is to be contacted to assess the situation and consult with Heritage NSW regarding the most appropriate course of action.
4. Should the proposed development be altered significantly from designs and specifications outlined in this report then a reassessment of heritage/archaeological impacts may be required. This includes any impacts not explicitly stated in Section 6.1, and the installation of any subsurface services.

CONTENTS

EXECUTIVE SUMMARY **III**

1 INTRODUCTION **1**
1.1 PROPOSED WORKS *1*
1.2 METHODOLOGY *1*
1.3 OBJECTIVES *2*
1.4 PROJECT TEAM AND ACKNOWLEDGEMENTS *2*
1.5 LIMITATIONS OF THE REPORT *2*
1.6 ABBREVIATIONS *6*

2 STATUTORY CONTEXT **7**
2.1 INTRODUCTION *7*
2.2 ENVIRONMENT PROTECTION AND BIODIVERSITY CONSERVATION ACT 1999 *7*
2.3 NSW HERITAGE ACT 1977 *7*
2.4 ENVIRONMENTAL PLANNING INSTRUMENTS *8*
2.5 VICTORIAN HERITAGE REGISTER *8*
2.6 VICTORIAN HERITAGE INVENTORY *9*
2.7 NON-STATUTORY HERITAGE LISTINGS *9*
2.8 SECTION SUMMARY *9*

3 HISTORICAL BACKGROUND **11**
3.1 HISTORY OF BRIDGE CONSTRUCTION IN NSW *11*
3.2 OVERVIEW OF THE DEVELOPMENT OF THE ROAD AND RAIL NETWORK IN NSW *11*
3.3 HISTORY OF TIMBER BEAM BRIDGES IN NSW *12*
3.4 HISTORY OF THE SNOWY VALLEYS REGION *15*
3.5 HISTORY OF TOWONG BRIDGE *16*

4 PHYSICAL INSPECTION **23**

5 ASSESSMENT OF SIGNIFICANCE **27**
5.1 INTRODUCTION *27*
5.2 BASIS FOR ASSESSMENT *27*
5.3 LEVELS OF SIGNIFICANCE *27*
5.4 SIGNIFICANCE ASSESSMENT *28*
5.5 STATEMENT OF SIGNIFICANCE *30*

6 STATEMENT OF HERITAGE IMPACT **31**
6.1 PROPOSED WORKS *31*
6.2 DISCUSSION OF HERITAGE IMPACTS *32*
6.3 STATEMENT OF HERITAGE IMPACT *32*

7 RECOMMENDATIONS **34**

8 REFERENCES **35**

APPENDIX A **37**

FIGURES

Figure 1.1	Location of the study area	3
Figure 1.2	Detailed aerial of the study area	4
Figure 1.3	Cadastral boundaries surrounding the study area	5
Figure 2.1	Heritage items in and near the study area	10
Figure 3.1	Pre-1894 detail of top of trestle of a timber beam bridge	13
Figure 3.2	First layer of cross planks on the girders shown on the left, while a second layer of longitudinal planks is shown on the right	14
Figure 3.3	Study area in relation to the 1893 Parish plan of Bringenbrong (Source: NSW Land Registry Services, Map No. 572797)	18
Figure 3.4	Study area in relation to Historical 1964 aerial image of the Bringenbrong Parish	20
Figure 3.5	Study area in relation to Historical 1979 aerial image of the Bringenbrong Parish	21
Figure 3.6	Study area in relation to Historical 1999 aerial image of the Bringenbrong Parish	22
Figure 4.1	Northern approach associated with Towong Bridge.	24
Figure 4.2	Looking south towards the pier supports associated with the bridge	24
Figure 4.3	Looking north towards the northern abutment of Towong Bridge	25
Figure 4.4	North-facing view showing the decay to the base of the timber piers associated with Towong Bridge	25
Figure 4.5	Detailed view of decay evident on the base of timber pier support located at the northern end of Towong Bridge	26
Figure 4.6	Northern approach associated with Towong Bridge showing the bitumen surface of the deck over the original timber decking	26

TABLES

Table 2.1	Summary of heritage register listings for the subject study area.	9
Table 5.1	Assessment of significance	28
Table 6.1	Documents used to formulate the impact assessment	31
Table 6.2	Assessment against Statement of Heritage Impact questions	32

1 INTRODUCTION

Austral Archaeology Pty Ltd (Austral) has been commissioned by Cardno on behalf of Transport for NSW (TfNSW) to prepare a Statement of Heritage Impact (SoHI) for the Towong Bridge Replacement Project located on Towong Road at the border of New South Wales (NSW) and Victoria.

The Towong Bridge is situated over the Murray River and links Upper Murray Road, a local road in Victoria to Towong Road, a local road in NSW. Within NSW, the bridge is within the road corridor bounded by Lot 7, DP19863 to the north and Lot 8, DP19863 to the south-east. A small portion at the southern end of the study area is situated across the Victorian border and lies within the entirety of Lot 8A-G/PP5799 and the western portion of Lot 11C-J/PP5799.

The curtilage boundary of the heritage item associated with Towong Bridge lies entirely within the boundary of NSW.

The study area lies within the Snowy Valleys Council Local Government Area (LGA). The location of the study area is shown in Figure 1.1, Figure 1.2 and Figure 1.3. The study area is located within the parish of Bringenbrong in the county of Selwyn.

This report will form part of a Review of Environmental Factors (REF) that is being prepared by Cardno on behalf of TfNSW under Part 5.1 of the *Environmental Planning and Assessment Act 1979* (EPA Act).

The purpose of this SoHI is to undertake historical research of the study area which will be utilised to examine the proposed works in light of the heritage values and significance of the study area and provide suitable management recommendations.

1.1 PROPOSED WORKS

The scope of works described in this section is taken from plans and information provided by the Proponent and is described in greater detail in Section 6.

The Towong Bridge piers and supports are in poor structural condition, and in 2016 Roads and Maritime Services (RMS), the precursor to TfNSW, installed temporary pier and abutment supports in order to extend the life of the bridge by up to 5 years. The objectives of the temporary works at Towong Bridge were to remove the 15 tonne load limit that was imposed on the bridge in 2015 and to reinstate the previous load limit of 42.5 tonnes, as well as to improve the safety of the bridge to road users and to maintain the integrity and functionality of a local heritage item. As stated in the REF prepared by RMS in 2016 for the temporary repair works, the extended life of the current bridge however was largely dependent on the ability of the bridge substructure to resist regular flooding events that are common on the Upper Murray River (Roads and Maritime Services 2016).

In early 2020, a concept design was prepared by SMEC on behalf of RMS for the replacement of the existing bridge with a new bridge on the same alignment. The proposed option for the new bridge is the construction of an 11 metre wide, 3-span Super-T-girder bridge on the current alignment incorporating 2 traffic lanes and a 1.8 metre wide pedestrian walkway (SMEC 2020).

1.2 METHODOLOGY

The methodology supporting this report involved a period of research to locate additional background material and to prepare a synthesis of the historical research to better reflect and understand the historical context of the study area.

The report is underpinned by the philosophy of the International Council on Monuments and Sites (ICOMOS) and the *Burra Charter: Australia ICOMOS Charter for Places of Cultural Significance, 2013* (Burra Charter), and the practices and guidelines of the Heritage NSW team of the Department of Premier and Cabinet (DPC), including the NSW Heritage Manual (1996 and subsequent revisions and additions).

1.3 OBJECTIVES

The purpose of this SoHI is to assess the potential impact from the development on the significance of any heritage values that may be present within or in the vicinity of the study area. The report will provide suitable management recommendations should impacts to heritage values be anticipated.

The objectives of this report are to:

- Identify any potential historical heritage values associated with the study area;
- Make a statement of significance regarding any historical heritage values that may be impacted by the project;
- Assess the impact of the proposed works on any identified heritage values; and
- Make appropriate management and mitigation recommendations.

1.4 PROJECT TEAM AND ACKNOWLEDGEMENTS

The project team has been led by Alexander Beben (Director, Austral) who has managed the project and provided input into the assessment approach and management recommendations. The assessment was authored by Miles Robson (Senior Archaeologist, Austral) and Ricardo Servin (Archaeologist, Austral). Sam Steel prepared all GIS mapping in this report. David Marcus (Director, Austral) reviewed the draft report for quality assurance purposes and technical adequacy.

1.5 LIMITATIONS OF THE REPORT

This assessment includes an assessment of built and archaeological values to support the REF being prepared by the proponent. The report must be read in conjunction with the main REF as it contains supporting documentation not included within this report. This report does not include an assessment of Aboriginal cultural heritage that may be present within the study area.

The results, assessments and judgements contained in this report are constrained by the standard limitations of historical research and by the unpredictability inherent in archaeological zoning from the desktop. Whilst every effort has been made to gain insight to the historical values of the study area, Austral cannot be held accountable for errors or omissions arising from such constraining factors.

Figure 1.1 Location of Study Area

21016 Towong Bridge

Source: NSW LPI Aerial

Drawn by: AH Date: 2021-04-29

AUSTRAL ARCHAEOLOGY

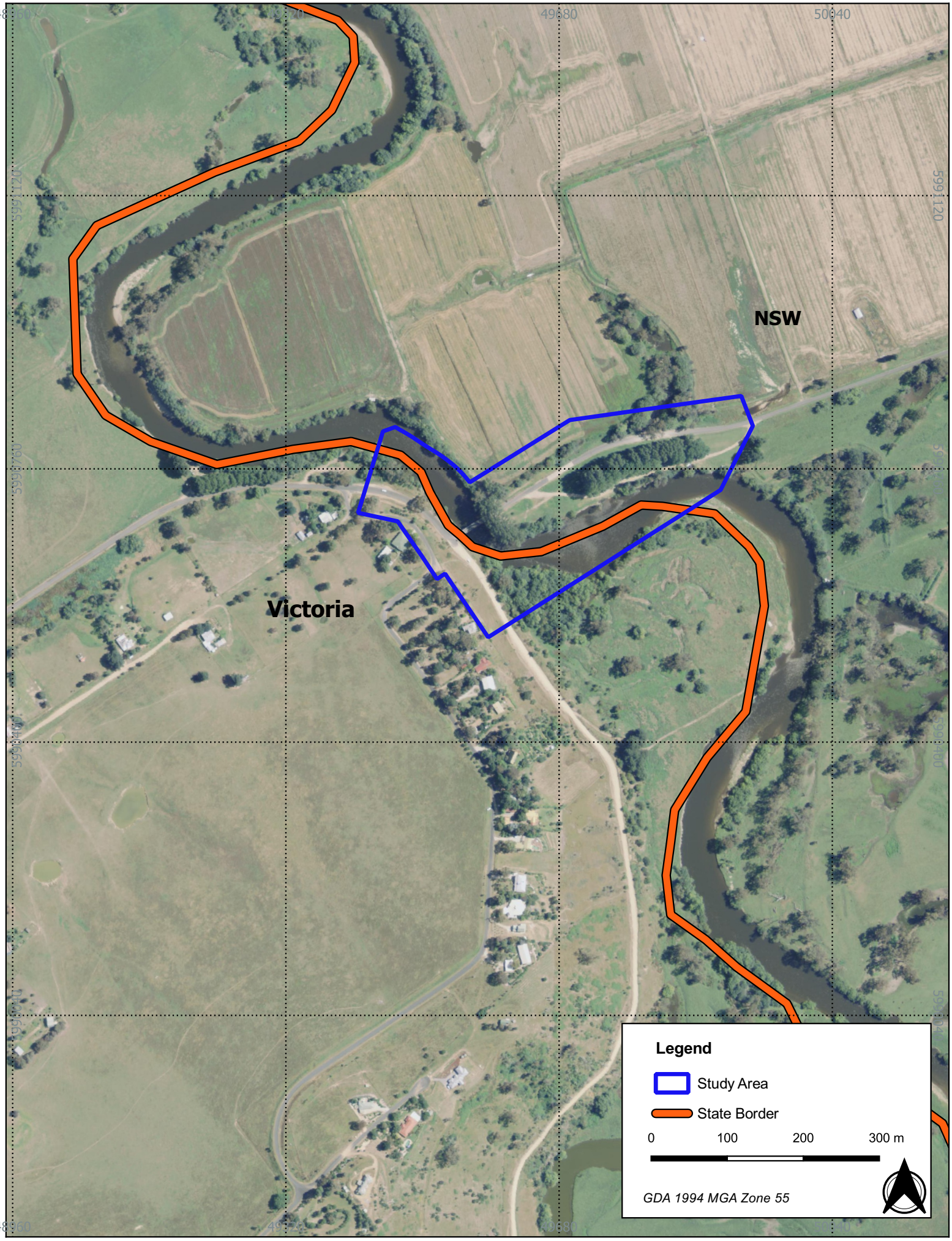

Figure 1.2 Detailed aerial of the study area

21016 Towong Bridge

Source: NSW LPI Aerial

Drawn by: AH Date: 2021-04-20

AUSTRAL ARCHAEOLOGY

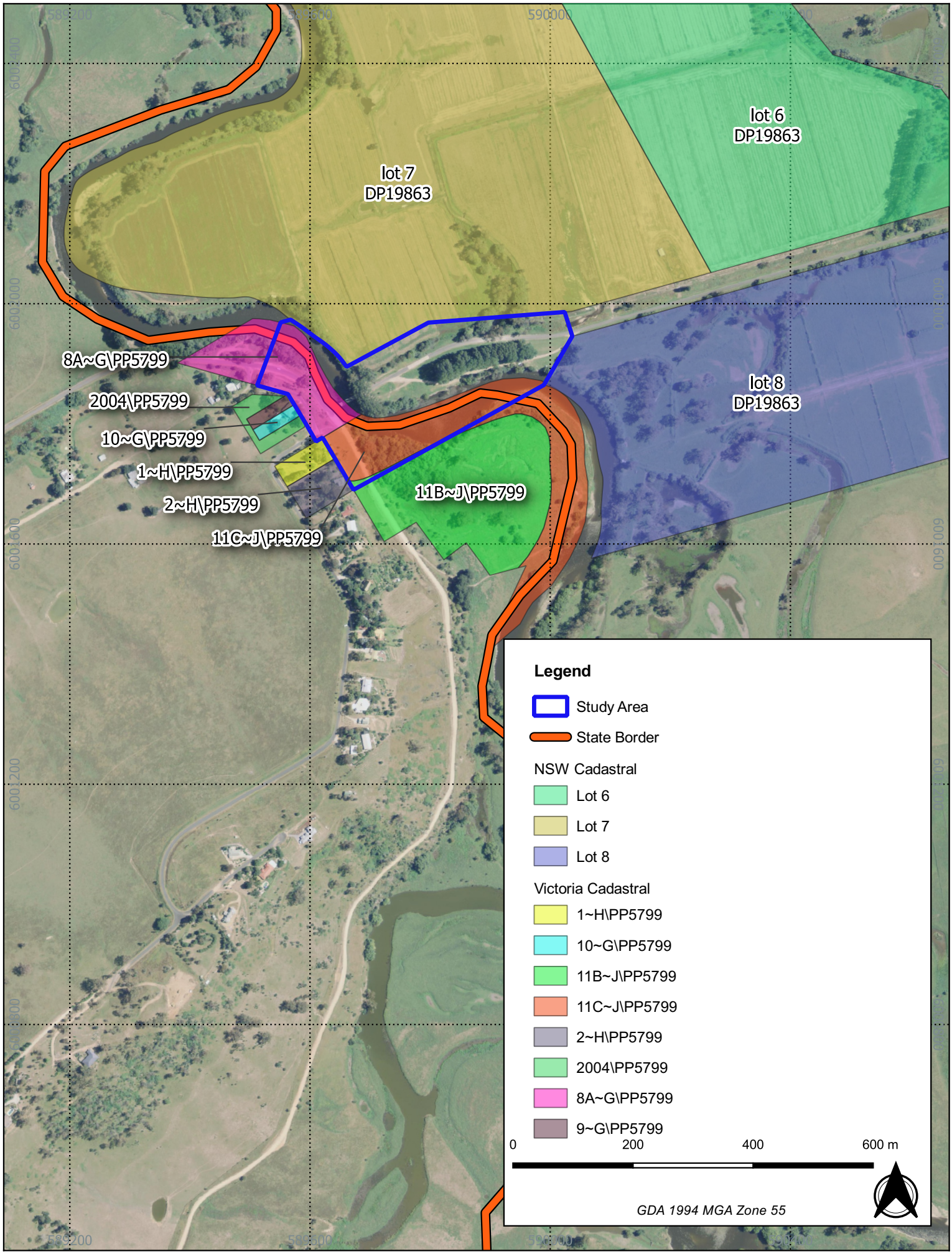

Figure 1.3 Cadastral boundaries surrounding the study area 21016 Towong Bridge

Source: NSW LPI Aerial *Drawn by: AH Date: 2021-04-20*

AUSTRAL ARCHAEOLOGY

1.6 ABBREVIATIONS

The following are common abbreviations that are used within this report:

Burra Charter	*Burra Charter: Australia ICOMOS Charter for Places of Cultural Significance 2013*
CHL	Commonwealth Heritage List
DCP	Development Control Plan
DMR	Department of Main Roads
DPC	Department of Premier and Cabinet
EPA Act	*Environmental Planning and Assessment Act 1979*
EPBC Act	*Environmental Protection and Biodiversity Act 1999*
EPI	Environmental Planning Instrument
Heritage Act	*NSW Heritage Act 1977*
ICOMOS	International Council on Monuments and Sites
IHO	Interim Heritage Order
ISEPP	*State Environmental Planning Policy (Infrastructure) 2007*
LEP	Local Environmental Plan
LGA	Local Government Area
NHL	National Heritage List
NSW	New South Wales
PWD	Public Works Department
RMS	Roads and Maritime Services
RNE	Register of the National Estate
RTA	Roads and Traffic Authority
SHI	State Heritage Inventory
SHR	State Heritage Register
Study Area	Towong Bridge, Towong, NSW
TfNSW	Transport for New South Wales
Tumbarumba DCP	*Tumbarumba Development Control Plan 2011*
Tumbarumba LEP	*Tumbarumba Local Environmental Plan 2010*
VHR	Victorian Heritage Register
VHI	Victorian Heritage Inventory

2 STATUTORY CONTEXT

2.1 INTRODUCTION

The following section summarises the relevant statutory context, including heritage listings, acts, and environmental planning instruments which are relevant to the study area and its cultural heritage.

Note that, while the majority of the study area lies within the NSW border, a small portion at the southern end of the study area lies within the Victorian border. As such, relevant statutory contexts associated with both NSW and Victoria will be assessed for the study area.

2.2 ENVIRONMENT PROTECTION AND BIODIVERSITY CONSERVATION ACT 1999

The *Environment Protection and Biodiversity Conservation Act 1999* (EPBC Act) established the Australian Heritage Council (formerly the Australian Heritage Commission) and provides for the protection of cultural heritage at a national level and for items owned or managed by the Commonwealth. The EPBC Act has established two heritage registers:

- Commonwealth Heritage List (CHL): for significant items owned or managed by Commonwealth Government agencies;
- National Heritage List (NHL): for items assessed as being of national cultural significance.

A referral under the EPBC Act that is approved by the Australian Heritage Council is required for works to an item registered on either of these lists to ensure that the item's significance is not impacted upon.

No part of the study area appears on either the CHL or the NHL.

The Australian Heritage Council is also responsible for keeping the Register of the National Estate (RNE). In 2007 the RNE was frozen and no further sites were added to it. For Commonwealth properties, the RNE was superseded by the CHL and NHL lists. The RNE is now retained as an archive of information about more than 13,000 places throughout Australia.

No part of the study area appears on the RNE.

2.3 NSW HERITAGE ACT 1977

The Heritage Council is the approval authority under the Heritage Act for works to an item on the State Heritage Register (SHR). Section 57(1) of the Heritage Act identifies the need for Heritage Council approval if the work involves the following tasks:

- demolishing the building or work;
- damaging or despoiling the place, precinct or land, or any part of the place, precinct or land;
- moving, damaging or destroying the relic or moveable object;
- excavating any land for the purpose of exposing or moving the relic;
- carrying out any development in relation to the land on which the building, work or relic is situated, the land that comprises the place, or land within the precinct;
- altering the building, work, relic or moveable object;
- displaying any notice or advertisement on the place, building, work, relic, moveable object or land, or in the precinct; and
- damaging or destroying any tree or other vegetation on, or removal of any tree or other vegetation from the place, precinct or land.

Demolition of an SHR item (in whole) is prohibited under the Heritage Act, unless the item constitutes a danger to its occupants or the public. A component of an SHR item may only be demolished if it does not contribute to the significance of the item.

Section 57(1) of the Heritage Act also applies to archaeological remains (such as relics) within an SHR site, and excavation can only proceed subject to approval of a Section 60 application by Heritage NSW.

No part of the study area is listed on the SHR.

HERITAGE AND CONSERVATION REGISTER (SECTION 170 REGISTER)

Under Section 170 of the Heritage Act, government instrumentalities must keep a Heritage and Conservation Register (a Section 170 Register) which contains items under the control or ownership of the agency and which are, or could, be listed as heritage items (of State or local significance). The road reserves within which the study area is located are owned by Snowy Valleys Council.

The study area is listed under Section 170 on the Roads and Maritime Heritage and Conservation Register as 'RTA Bridge No. 5947'.

2.4 ENVIRONMENTAL PLANNING INSTRUMENTS

An Environmental Planning Instrument (EPI) is made under the EPA Act. An EPI can be a Development Control Plan (DCP), Local Environmental Plan (LEP) or a State Environmental Planning Policy.

TUMBARUMBA LOCAL ENVIRONMENTAL PLAN 2010

The study area lies within the Snowy Valleys Council LGA, which was formed in 2016 from the merger of Tumut Shire with the neighbouring Tumbarumba Shire. The *Tumbarumba Local Environmental Plan 2010* (Tumbarumba LEP) is still current for the study area and deals with local heritage items within the Snowy Valleys Council LGA. Part 5.10 of the Tumbarumba LEP deals with heritage conservation, and subsections (2) and (3) determine whether development consent needs to be granted by the Snowy Valleys Council prior to any activities occurring which may impact cultural heritage. Heritage items are listed under Schedule 5 of the Tumbarumba LEP.

The study area is listed as a heritage item on the Tumbarumba LEP as 'Towong Bridge over Murray River' (Item No. I21).

TUMBARUMBA DEVELOPMENT CONTROL PLAN 2011

As noted above, the study area lies within the boundaries of the Snowy Valleys Council LGA. The *Tumbarumba Development Control Plan 2011* (the Tumbarumba DCP) is still current for the study area. Part 2.4 of the Tumbarumba DCP outlines design controls to be implemented when dealing with heritage items in general, and specific requirements for managing post-European archaeological sites are detailed in Section 2.4.2 of Part 2.4 of the DCP.

STATE ENVIRONMENTAL PLANNING POLICY (INFRASTRUCTURE) 2007

The *State Environmental Planning Policy (Infrastructure) 2007 (*ISEPP) allows for development without consent for activities undertaken by Government departments or agencies as part of their everyday responsibilities. TfNSW is permitted to undertake a range of activities relating to the maintenance of road infrastructure. Environmental assessment of these activities is undertaken under Division 5.1 of the EP&A Act.

As the project proposes to remove the bridge, Clause 14 of the ISEPP is relevant; this requires that consultation with local council occurs when a development has the potential to impact on a local heritage item.

2.5 VICTORIAN HERITAGE REGISTER

The Victorian Heritage Register (VHR), established by the *Heritage Act 1995,* provides the highest level of statutory protection for historic sites in Victoria.

The *Heritage Act 1995* itself was amended in 2017. The *Heritage Act 2017* regulates the protection and conservation of places and objects of heritage significance listed on the VHR. It also provides for the protection or recording of all historical archaeological sites and relics, including those listed in the Victorian Heritage Inventory.

No part of the study area is listed on the on the VHR.

2.6 VICTORIAN HERITAGE INVENTORY

The Victorian Heritage Inventory (VHI), established by the *Heritage Act 1995*, provides the statutory protection for all historical archaeological sites, areas, relics, and private collections of relics in Victoria. Sites listed on the VHI are not of State significance, however are of local or regional significance.

No part of the study area is listed in the VHI.

2.7 NON-STATUTORY HERITAGE LISTINGS

A number of organisations maintain registers of buildings or sites which they have assessed and believe to be of cultural heritage significance. These registers have no statutory authority. However, the inclusion of a place on a non-statutory register suggests a certain degree of community esteem and appreciation. Non-statutory registers include the National Trust Register, the Royal Australian Institute of Architects (RAIA) 20th Century Register of Significant Buildings, and the Art Deco Society of NSW Art Deco Building Register.

The study area is not listed on the National Trust Register, the RAIA 20th Century Register of Significant Buildings, or the Art Deco Building Register.

2.8 SECTION SUMMARY

Table 2.1 lists the relevant statutory and non-statutory registers, listings and orders, and identifies those in which any part of the site is listed. Heritage items in and surrounding the study area are shown on Figure 2.1.

Table 2.1 Summary of heritage register listings for the subject study area.

Register/Listing	Inclusion	Statutory implications
NHL	No	N/A
CHL	No	N/A
RNE	No	N/A
SHR	No	N/A
S170 Register	Yes	Yes
Tumbarumba LEP	Yes	Yes
Tumbarumba DCP	Yes	Yes
VHR	No	N/A
Victoria Heritage Inventory	No	N/A
Register of the National Trust (NSW)	No	N/A
The RAIA 20th Century Register	No	N/A
The Art Deco Society's Art Deco Building Register	No	N/A

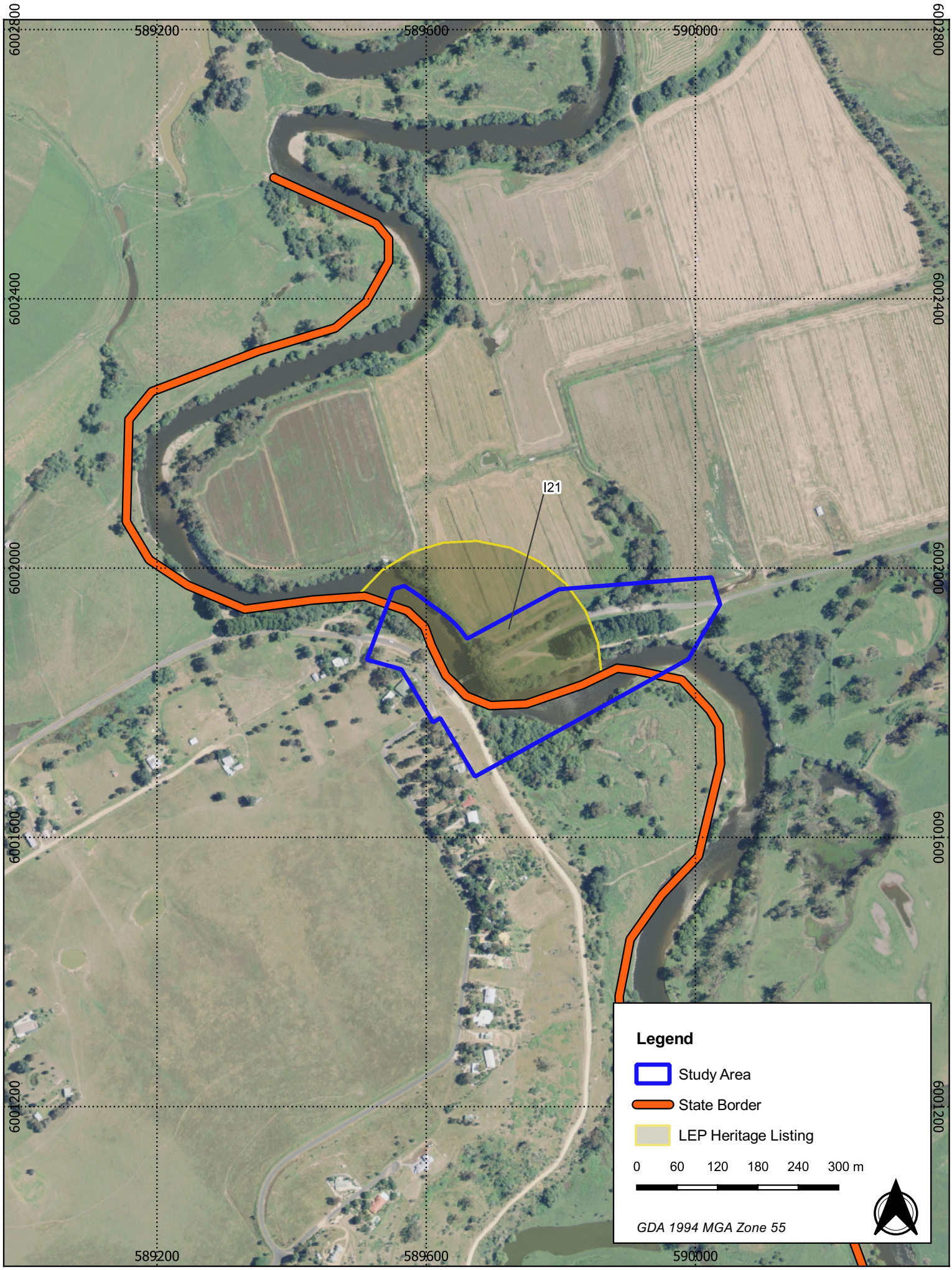

Figure 2.1 Heritage items in and near the study area

21016 Towong Bridge

Source: NSW LPI Aerial, SHR *Drawn by: AH Date: 2021-04-28*

AUSTRAL ARCHAEOLOGY

3 HISTORICAL BACKGROUND

The following historical background is designed to contextualise a site-specific history which will aid in the understanding of the heritage significance of the study area. The historical background will provide a useful and concise summary of the history and heritage significance of the study area.

3.1 HISTORY OF BRIDGE CONSTRUCTION IN NSW

The first bridge constructed in NSW was built in 1788. This was a simple timber bridge constructed over the Tank Stream, near what is today the intersection of George and Bridge streets in the Central Business District of Sydney. Soon after, it was washed away and needed to be replaced. The first permanent' bridge in NSW was its successor; a stone arch bridge with a span of 24 feet (7.3 metres) erected in 1804. However, this was not a triumph of colonial bridge engineering as it collapsed after only 3 years' of service. It took a further 5 years for the bridge to be rebuilt in an improved form. Prior to the arrival of David Lennox in the Colony in 1832, NSW was without expert knowledge in bridge design and construction. Lennox, who had worked with the famous bridge engineer Thomas Telford, became the Superintendent of Bridges for NSW in 1833 (McMillan, Britton and Kell Pty Ltd 1998, p.12).

During the first 60 years of the Colony, the majority of bridges were built from stone or timber in the same manner as bridges being constructed in Britain and Europe. Stone was the bridge building material of choice in NSW, with construction costs kept low by the use of convict labour. However, with the cessation of convict transportation in the 1840s and subsequent rise in labour costs, bridge designers were forced to explore the use of other materials in bridge construction (McMillan, Britton and Kell Pty Ltd 1998, p.12).

3.2 OVERVIEW OF THE DEVELOPMENT OF THE ROAD AND RAIL NETWORK IN NSW

The development of the road and rail network was a significant component in the economic growth of Colonial NSW. Transport was an important and vital link for the development of agriculture and trade with the lack of suitable roads and river crossings delaying the benefits of a growing economy. The colonies bordering NSW, namely Queensland, Victoria and South Australia, prospered from the redirection of commodity movements as a result of NSW's poor transport network during the period 1860 to 1880 (McMillan, Britton and Kell Pty Ltd 1998, p.16). From the late 1870's, Victoria and NSW systematically constructed railways to improve their transport connections. The last profitable riverboat trading area to Echuca was on the Edward River and the Lower Murrumbidgee to Balranald. Railways from Victoria tapped this trade when lines were constructed to Moulamein in 1925, Balranald in 1926 and Stoney Crossing on the Wakool River in 1928.

In response to this redirection of trade, the successive NSW governments recognised the need to invest capital in developing and improving the transport network of their State. By the late 1880s, rail had reached the edges of NSW and provided a means to economically transport agricultural produce. Roads were an important component to transport goods and produce beyond the reach of rail lines and provided a vital link for 100s of men employed in the movement of this material (McMillan, Britton and Kell Pty Ltd 1998, p.17).

The development and expansion of the railways generated an increase in freight movement, as well as providing a more accessible and economic means of travel for the public. This increase in the use of rail was also influential in the demand for the improvement and expansion of the road network, with bridge construction an important component. However, the capital expenditure required to support the development and construction of such infrastructure was a substantial commitment of funds and resources which, at the time, NSW was unable to readily provide. Through the 1850s NSW continued to remain underfunded and as a consequence, capital for funding the improvement of the transport network often had to be sought from Britain at high rates of interest (McMillan, Britton and Kell Pty Ltd 1998, p.18).

In order to minimise such borrowings, and thus contain the cost of building bridges within the developing road and rail networks, the use of expensive construction materials had to be avoided. In 1861, a parliamentary decree was passed that local materials were to be used where possible. This encouraged the use of local timbers and constrained the use of imported materials such as iron and the use of labour-intensive masonry work (McMillan, Britton and Kell Pty Ltd 1998, p.18).

3.3 HISTORY OF TIMBER BEAM BRIDGES IN NSW

Timber beam bridges are considered as vital structures of the road and railway networks of land transport throughout NSW during early settlement. Following the growth of the settlement of Sydney and the later expansion to the west of the NSW coast, the Colony significantly depended on the effective and economical use of roads, and later on the use of railways through rural areas. The earliest known construction of a timber beam bridge in Sydney was the log bridge that was built over the Tank Stream in October, 1788. This bridge was replaced by a stone arch bridge in 1803, and lies in the vicinity of present day Bridge Street (RTA 2000, p.13).

In 1794, Major Francis Grose constructed a timber bridge over Parramatta River, 4 years after the establishment of Parramatta. However, the bridge was not stable and it was soon swept away by floodwater in 1795. This was eventually replaced by a more durable timber bridge that was constructed on stone piers in 1802 (RTA 2000, p.14).

In 1805, the Governor's road committee listed 10 bridges to be constructed on Parramatta Road as this road was considered an important food supply route. This included the construction of bridges between Johnston's Creek in Annandale and A'Beckett's Creek in Parramatta, to the following specification:

> *16 feet wide with Four Sleepers of at least a foot and a half in diameter, either of ironbark or blue gum, bedded on timber of the like dimensions, to be covered with three inch planks, 16 feet long and properly secured by treenails of 1 ½ inch diameter* (Department of Main Roads 1976).

Under the term of Governor Macquarie, William Roberts was contracted to undertake many road projects, which included the construction of 28 bridges on Windsor and Liverpool roads. The construction of these bridges were undertaken between 1813 and 1821 (RTA 2000, p.14).

Following expeditions through the Blue Mountains by Blaxland, Wentworth and Lawson in 1813, William Cox and his team constructed a roadway to Hartley in January of 1815. As part of this project, a number of bridges were constructed over the Cox's River and Lett River (RTA 2000, p.16).

Building infrastructure was the responsibility of the Colonial Architect during the 1840s and 1850s. However, the demand for public infrastructure projects exceeded the capacity of the Colonial Architect's Office following the impact of the Gold Rush, which ultimately allowed for the establishment of the Public Works Department (PWD) in 1859 (RTA 2000, p.16).

Timber was the dominant construction material used for bridges by the time the PWD was established. The dominance of the use of timber for bridges was further strengthened in 1861 when the Government stated that local materials (stone, bricks and timber) had to be used in preference to wrought iron. This was following the excessive costs required to build 2 iron bridges over the Nepean River; one at Menangle in 1863, and the other in Penrith in 1867. The combined cost of these two bridges was £194,562, which was an enormous sum for the growing Colony (RTA 2000, p.16).

During the mid-late 19th century, timber beam bridges were cheap and considered good value, however due to the continuous maintenance required for these types of bridges, the total cost for these bridges accumulated.

Timber beam bridges can be classified into design phases:

- Pre-1894 traditional design
- Post-1894 when the design was improved to make the bridges cheaper, stronger and requiring less maintenance.

The construction of timber beam bridges between 1840 and 1894 consisted of a series of timber trestles, with each trestle consisting of 3 to 5 piles measuring 14 to 18 inches in diameter that were driven into the bed of the waterway. The piles were capped by a 12 inch x 12 inch (300 x 300 millimetre) headstock, which is a single piece of timber sitting over the tops of the piles. To replace a headstock required raising the whole superstructure to obtain clearance. The piles were then braced on their outside by opposite inclined 10 inch x 4 inch (250 millimetre x 100 millimetre) planks to form cross bracing (RTA 2000, p.18).

The headstock would be supported by a set of short (8 to 12 foot) 12 inch x 12 inch timbers, which are known as corbels. The number and location of the corbels would be the same as the main longitudinal beams that were usually 12 inch x 12 inch dressed or 15 inch diameter (380 millimetre) logs dressed at their ends only to sit flat on the corbels. Both 12 inch x 12 inch beams and 15 inch round beams were used in the construction of timber beam road bridges. The most common arrangement of this design was for the dressed or squared timbers to be placed on the external side, while the round logs with their bark attached were placed in the interior so that they were hidden away for aesthetic purposes. Thick, transverse deck planks were placed on top of the main beams and measured 3 inches (75 millimetres) in thickness (RTA 2000, p.19).

Figure 3.1 Pre-1894 detail of top of trestle of a timber beam bridge

Both timber beam bridges and timber truss bridges were redesigned by Percy Allan in 1894. Allan's objectives in his redesigns were to simplify the construction and maintenance of the bridge as well as to significantly reduce the amount of timber used.

One of the main ways in which Allan tried to resolve the maintenance costs of timber beam bridges was the replacement of headstocks that were attached to the tops of the piles by a combination of internal mortise and tenons, and external strap bolts. Allan's solution to this issue was relatively simple and consisted of a pair of half-headstocks, or capwales, being checked into the piles at their tops, one on each side, and cross-bolted. This therefore allowed the headstocks to be replaced without raising the bridge, while the time-consuming work required to make the mortise and tenons and the use of strap bolts were no longer required (RTA 2000, p.20).

This solution formed by Allan also allowed for the reduction of lengths of corbels, reduction in the number of shear keys for compound beams, and the elimination of scarfing of the main beams over the trestles. Furthermore, full-length piles were eliminated and cut off just below the ground and covered by a concrete sill or capping beam, with an independent trestle structure built on top of the sill. However, due to the effects of lateral earth pressure, this system could not be applied to the abutments and so full height piles were retained at the abutments. Changes in the deck design were also made as a result, changing from a single layer of 75 millimetre cross planks to 2 layers of 50 millimetre planks, which consisted of one cross layer with a longitudinal layer over the top (Figure 3.2) (RTA 2000, p.20).

These changes caused a reduction of the cost of construction of timber beam bridges by 20%, while also reducing the maintenance costs and extending the life of these bridges.

Figure 3.2 First layer of cross planks on the girders shown on the left, while a second layer of longitudinal planks is shown on the right

During the 1920s, developments were made to the deck of timber beam bridges which included the use of spiking planks under the deck between the beams. Given that beams generally out-live several phases of decks, an excessive number of spike holes were formed in the beams that contained successive decks. These holes therefore caused the penetration of water into the beams, thus causing significant decay of the timber beams. In order to reduce this problem, spikes were installed into the spiking planks rather than the beams (RTA 2000, p.20).

Following the recovery of steel production at the end of WWII and during the 1950s, as well as the introduction of pre-stressed concrete, very few new timber beam bridges were built. Furthermore, many of the timber beam bridges have since either been replaced by steel beams or pre-cast pre-stressed concrete units, or been stripped of their timber planked decks and covered by a slab of reinforced concrete (RTA 2000, p.23).

At the peak of their use, timber beam bridges numbered in excess of 4,000 (including those forming spans to major bridges) and represented 80% of the total bridge population that were controlled by the Department of Main Roads. Timber beam bridges played a significant role in the development of land transport, road and rail during the second half of the 19th century throughout NSW (RTA 2000, p.23). Currently, 110 timber beam bridges are under the control of TfNSW, approximately 800 are controlled by the State Rail Authority and approximately 3,000 are controlled by local councils (RTA 2000, p.23).

3.4 HISTORY OF THE SNOWY VALLEYS REGION

The study area forms part of the Snowy Valleys region, which was developed in the context of graziers and agriculture from the late 1820s. In 1823, Commissioner Bigge recommended that an expedition be sent inland from Sydney to Lake George. The objective of this expedition was to determine the nature of the country and the possibility of communication by land between Sydney and the smaller districts of the Colony of NSW that were already settled in the South West Slopes. Governor Sir Thomas Brisbane was influenced by this recommendation and initially formed the idea of sending a party of convicts with food and horses to explore the region, and promised to grant them their freedom if they safely made the journey back to Sydney. Nevertheless, Governor Brisbane was talked out of this idea and instead called upon Hamilton Hume and William Hovell, experienced explorers of the Colony, to undertake the expedition. Hume and Hovell accepted this offer with the condition that they were provided with 6 men, 6 horses with packs, and a small quantity of arms and ammunition (Tumut and District Historical Society 1965, p.1).

Hume and Hovell started their expedition from Lake George on 3 October 1824 and greatly struggled in their journey through the mountains heading in a south and south-westerly direction until they emerged from the Tumut River Valley. From here, they travelled down through the Tumbarumba district and reached the Murray River near Albury on 16 November 1824 (Tumut and District Historical Society 1965, p.3).

Settlement soon followed the discovery of the region by Hume and Hovell during the late 1820s. The first known record of early settlement of the Tumut district is from the diary of Captain Charles Sturt, written during his exploration of the Murrumbidgee River. On 27 November 1828, Sturt visited the station of Mr Warby at Darbalara on the Tumut River. During his visit, Mr Walby advised Sturt of the abundance of limestone and whinstone at James S Rose's station at Tumut Plains (Tumut and District Historical Society 1965, p.2). Another historical record of early settlement in the Tumut Valley comes from Dr George Bennett, who in 1832 visited Tumut in order to study the flora and fauna of the district. On 8 December 1832, Bennett visited Mr Walby's station at Darbalara and in his diary noted that butter and cheese produced at their farm were being sent to Sydney. This provides evidence for the early establishment of agricultural exports from the Snowy Valleys region and the importance of the dairy industry to the local economy (Tumut and District Historical Society 1965, p.3).

The early pioneer settlers of the Snowy Valleys region were squatters. As their 'runs' were located outside the settled areas of the Colony, they merely claimed a right to particular areas without paying any fees. This eventually led to the establishment of large squatter stations that were run almost as small towns in a relatively isolated area, cut off from other regions by particularly bad roads that became almost impassable in winter. The development of transport and communication lines was essential to the development of both the farming and semi-urban communities. The increased rural development during the 1830s and 1840s was spurred on by these squatters as well as individuals contracted to work on the stations. Together with professional people travelling to the stations and other workers looking for seasonal employment, traffic in the region flourished. The region was characterised by large holdings, and grazing of both sheep and cattle was taking place (Tumut and District Historical Society 1965, p.5).

The journey from Sydney to the Snowy Valleys region took approximately 5 weeks for the early pioneers on foot with their possessions carried by Bullocks (Tumut and District Historical Society 1965, p.5). By 1840, squatters were permitted to purchase the land around their homesteads for 5s per acre. Settlement in the Snowy Valleys region during the first half of the 19th century was very difficult for early pioneers given the harsh climatic conditions of the land and its remoteness. The region contained no doctors and no amenities of any kind. Furthermore, there was very little money and exchange of stock during the early years of settlement in the region, and produce of one's own stock was the main form of making a living. While squatters were well established throughout the region, particularly in Tumut, there was very little infrastructure, and by 1856 the town of Tumut consisted of only a single school building, a few mud and slab huts and 3 hotels (Tumut and District Historical Society 1965, p.8).

In 1859, gold was discovered at Kiandra and the 'rush' began in the Upper Murray region, which led to much needed growth and renewed interest in the area. The gold rush at Kiandra attracted 15,000 miners by 1860 (Schofield 1990, p.51). However, by 1861 there was a mass exodus from the region as the gold dried up, although more methodical mining was to continue in the region until well into the 20th century. The discovery of gold proved invaluable for the numerous pastoralists who were facing unemployment on the decreasing number of smaller holdings and stations (Schofield 1990, p.60). It was predominantly these people, later known as free selectors, who eventually purchased the lands which had been leased by their previous employers (Schofield 1990, p.60). The general importance of the discovery of gold for the NSW Colony is manifest in the huge increase in development that followed this period, not only in transport, but in social infrastructure generally. By 1866, the number of hotels in Tumut had grown to 11, while post-offices, stores and schools were also constructed (Tumut and District Historical Society 1965, p.6). The gold rush also acted as the catalyst for significant growth and development in Towong during the early 1870s, with numerous establishments being constructed in the town including schools, churches and hotels. The Towong Turf Club was formed in 1871, and in 1912 a new grandstand for the Turf Club was opened in Towong, and which in most part remains in its original condition today.

Despite the severity of the life for the early pioneers, it was this lifestyle choice that stimulated further rural development of the Snowy Valleys region, at first slowly from the start of the 1850s but really taking hold by the end of the 1860s and early 1870s. Similar developments were mirrored throughout NSW at this time. As a result, 'alpine grazing' also became a means of overcoming smaller holdings (Anon. 1996, p.120). The main farming industry in the region was wool, beef, mutton and butter. This was hampered, however, by the lack of good transportation. It was not until 1867 that there was a bridge constructed over the Murrumbidgee River at Gundagai, while the branch railway line from Gundagai to Tumut was not completed until 1903 (Tumut and District Historical Society 1965, p.10).

By the mid-20th century, Tumut, as well as a number of smaller townships within the Snowy Valleys region including Batlow, Tumbarumba, Corryong and Towong, were beginning to thrive economically. This was brought about following the establishment of successful industries, in particular the dairy industry, and an emerging timber industry (Tumut and District Historical Society 1965, p.11).

In summary, critical to these rural developments was the development of transport and communications infrastructure. European settlers from the 1820s had initially used bullocks to access the Snowy Valley region, however, with increased development, the creation of roads, railway lines and bridges became vital for the economical growth of townships within the region.

3.5 HISTORY OF TOWONG BRIDGE

Historical plans of the parish of Bringenbrong from 1893 shows that the study area was originally associated with a 640-acre portion of land owned by two brothers, James and Charles Douglas, during the late 19th century (Figure 3.3).

Records from the NSW Government Gazette indicate that James and Charles Douglas purchased 640 acres on the northern side of the Murray River at Bringenbrong in 1868 ('Government Gazette Notice' 1868). This was in addition to several other large portions of land throughout Bringenbrong which the Douglas brothers had purchased during the 1860s ('Towong Hill and Khancoban NSW' 1933). James and Charles Douglas used their land predominantly for farming bullocks, and were rather successful in selling their stock to butchers and meat preservers throughout the entire Upper Murray region ('The Melbourne Markets' 1871). Unfortunately, there is an absence of historical information on whether any buildings and structures were located within this particular portion of land.

In 1876, P Mitchell purchased the vast majority of the land at Bringenbrong from the Douglas brothers, including the portion of land which makes up the study area ('Towong Hill and Khancoban NSW' 1933). Mitchell continued to utilise the land for farming bullocks, selling much of his stock to Melbourne markets before the southern portion of his land, including that which encompasses the study area, was sold and transferred into public land in the 1890s.

The first proposal to build a bridge over the Murray River at Towong occurred in 1900 following continuous pressure from local residents, urging the need for an access route between Towong and Corryong:

> *In connection with the completion of the vote of £29,302 for road works and bridges, Mr. A.W. Craven, M.L.A, addressed the Victorian Assembly recently, saying that he desired to draw the attention of the Minister of Public Works to a request that was made by the residents of the Upper Murray district in a petition which they sent some time ago for the construction of a bridge across the Murray at Towong. The bridge would be on the main road, between an important part of New South Wales and the Upper Murray District (The Albury Banner and Wodonga Express, 1900, 28).*

Little eventuated from the request of local residents. In 1904, the Minister for Works stated that while he had been considering an application for the construction of a bridge over the Upper Murray at Towong, after learning that the estimated cost of such a bridge would be £10,000, he was of the opinion that there was not sufficient traffic at that point to warrant the expenditure of such a large sum ('The Proposed Bridge at Towong' 1904).

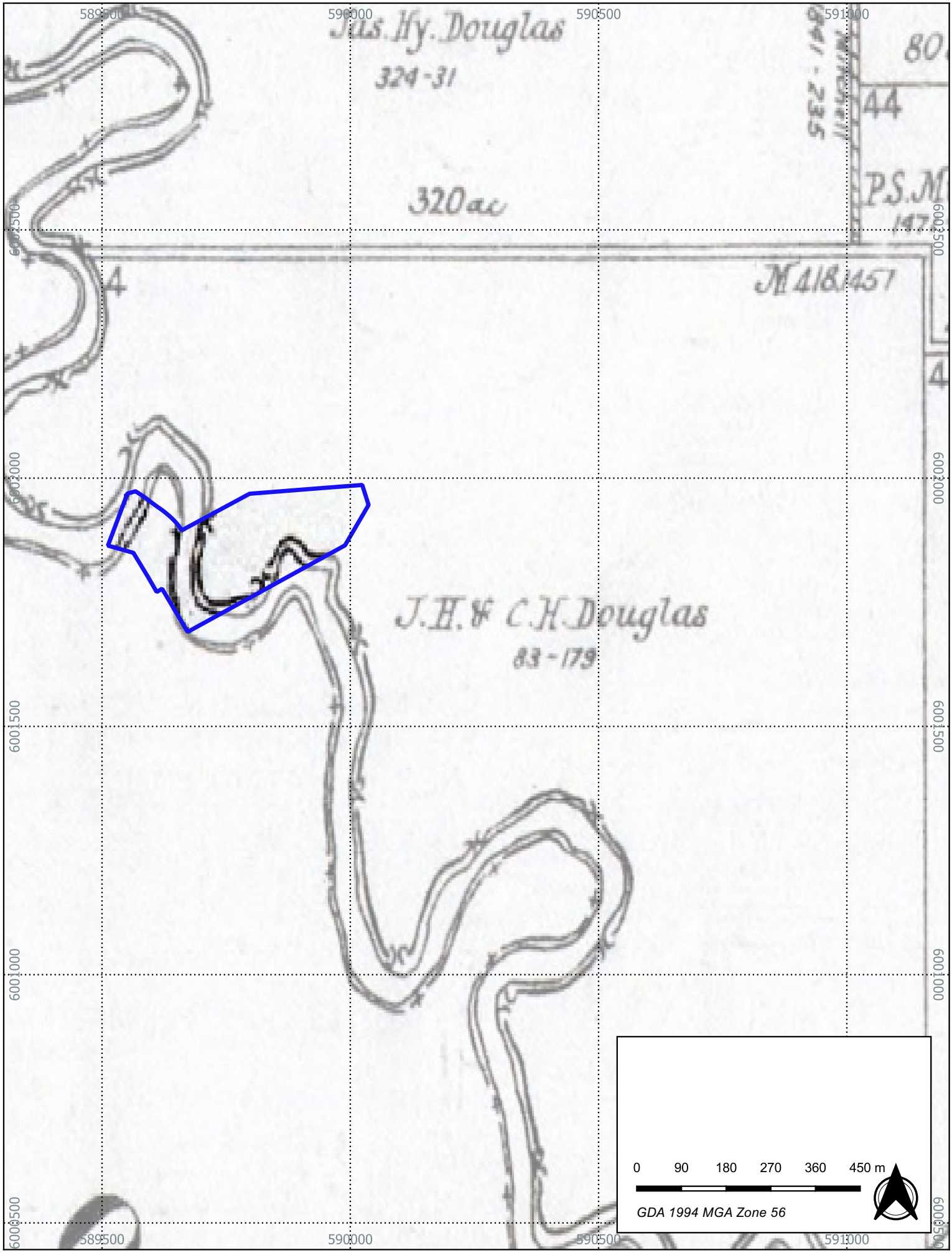

Figure 3.3 Study area in relation to the 1893 Parish plan of Bringenbrong 21016 Towong Bridge

Source: NSW Historical Lands Records Viewer

Drawn by: AH Date: 2021-04-20

AUSTRAL ARCHAEOLOGY

Large outcries from the public continued for the construction of a bridge at Towong over the Murray River in the early years of the 20th century following a number of fatalities in this specific section of the Murray River. This particular stretch of the Murray River at Towong was known as 'Lighthouse Crossing' and was notorious for drowning incidents in the late 19th century and beginning of the 20th century where its convenience as a 'short-cut' between Towong and Tooma in NSW combined with the strong currents in this stretch of the Murray.

By 1907, the Government had finally provided a positive response to locals regarding the bridge, and in September that year, the Council held a public meeting at Corryong to consider the best site for it ('The Upper Murray Bridge Question' 1907). Two sites were considered for the location of a bridge; the first was at Towong near the vicinity of the current study area and the other was at Bringenbrong, approximately 3 kilometres further south. In 1909, it was decided between the Public Works Department of NSW and the Public Works Department of Victoria to erect the proposed bridge at Bringenbrong, not at Towong ('District News - Tumbarumba' 1909).

Finally, in 1936, the Minister for Lands for NSW announced the proposal for plans for a bridge over the Upper Murray at Towong. This was following a further inspection of the proposed site by the Tumbarumba Council's engineer a year earlier, who had reported that the site associated with the current study area as satisfactory for a bridge and the proposal should be altered ('Tumbarumba Shire Council - Monthly Meeting' 1935). Plans for the proposed timber beam bridge over the Murray River were prepared by the Department of Main Roads in November 1936 and were subsequently submitted to the Victorian Country Roads Board. Following the approval of the plans by the Victorian Country Roads Board and their agreement to provide half the cost of the new structure, tenders were requested by the Department of Main Roads for the construction of the timber beam bridge at Towong ('Country Road Tenders' 1937).

According to the *Construction and Real Estate Journal,* the Department of Main Roads began construction of the new timber beam bridge at Towong on 9 December 1937, and that the bridge was proposed to be 175 feet (53 metres) in length ('Opportunities for Business' 1937). Construction work on the new bridge proceeded rapidly despite the large timber piles having to brought in from Nagambie, 335 kilometres south-west of the site ('Events in Cities and Towns' 1938).

The construction of the 5-span timber-beam bridge, with each span measuring 10.5 metres in length, was officially opened to traffic on 28 October 1938 ('Roads and Bridges - Works by Department of Main Roads' 1938).

Several alterations to the structure of the bridge were made during the second half of the 20th century. In 1960 modifications were made to the piles, which included the strengthening of irons and adjustments to bracing (Roads and Maritime Services 2016).

In 1975, a new approach span was added to the Victorian side of the bridge for a cost of $20,000, thus bringing the number of spans to 6. The span added in 1975 consisted of concrete footings in addition to the timber piles and was shorter than the original 5 spans, measuring 6.5 metres in length (Roads and Traffic Authority 1998, p.3).

More recently, in 2015 a steel beam on the upstream side of the timber deck was added for maintenance work, however was removed later in that year. In 2016, the structure was closed for an extended period while a temporary pier and abutment support was installed for T44 vehicle loads (44 tonne semi-trailers) in order to extend the life of the bridge by up to 5 years (Roads and Maritime Services 2016).

Figure 3.4 Study area in relation to Historical 1964 aerial image of the Bringenbrong Parish 21016 Towong Bridge

Source: NSW Historical Lands Records Viewer

Drawn by: AH Date: 2021-04-20

AUSTRAL ARCHAEOLOGY

Figure 3.5 Study area in relation to Historical 1979 Aerial image of the Bringenbron Parish 21016 Towong Bridge

Source: NSW Historical Lands Records Viewer

Drawn by: AH Date: 2021-04-20

AUSTRAL ARCHAEOLOGY

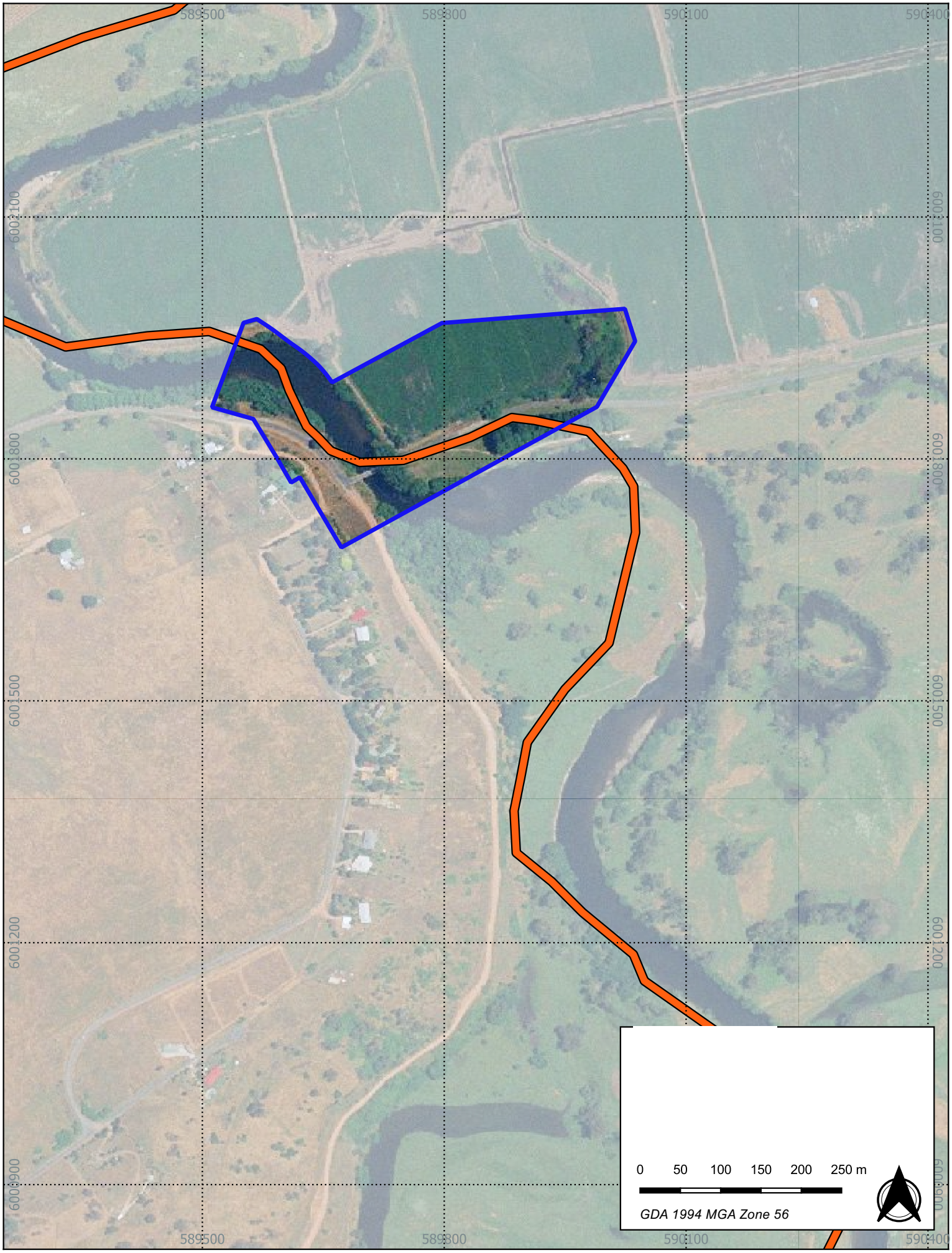

Figure 3.6 Study area in relation to Historical 1999 aerial image of the Bringenbrong Parish 21016 Towong Bridge

Source: NSW Historical Lands Records Viewer

Drawn by: AH Date: 2021-04-20

AUSTRAL ARCHAEOLOGY

4 PHYSICAL INSPECTION

A physical inspection of the study area was undertaken on 25 February 2021 by Miles Robson (Senior Archaeologist, Austral). The aims of the inspection were to assess the physical condition of Towong Bridge and to identify heritage values associated with the study. This included any known or previously identified heritage items. For the purposes of this assessment, a heritage item is a '*place, building, work, relic, moveable object or precinct'* as per the definition in Part 1 (4) of the Heritage Act.

Towong Bridge is a single-lane, 6-span timber beam bridge. All spans of the bridge are similar in construction, being timber with timber decking. The original bridge consisted of 5 spans, however, a span was added to the southern end of the bridge in 1975. This later span comprises of concrete footings in addition to the timber piles (Figure 4.1 and Figure 4.2).

The physical inspection of the bridge showed that the deck of the bridge consists of longitudinal timber deck boards laid over transverse deck boards, which are placed on 4 longitudinal round timber bridge girders. The girders abut over round timber corbels which are supported on transverse aligned timber trestles. The handrail of the bridge is also constructed with timber as well as the pier trestle substructure.

The bridge abutment comprises timber, concrete encased timber piles and steel piles (Figure 4.3).

Modifications are evident in the piers associated with the bridge. This includes concrete filled wraps around the piles in piers 1 to 4. Piers 1 and 3 consist of concrete wraps around the outer two piles, while piers 2 and 4 consists of concrete wraps around its outer 2 piles and around the middle pile. It was clear during the survey that the major cause of deterioration in the piers was caused by timber decay (Figure 4.4 and Figure 4.5). Timber decay was particularly severe towards the base of the piers where it has been most exposed to water (Figure 4.5).

Other modifications to Towong Bridge include the replacement of the timber deck surface with bitumen (Figure 4.6). Small areas of the bitumen demonstrate deterioration, thus exposing the original timber deck surface directly below (Figure 4.6).

Overall, the site inspection demonstrated that the structural integrity of the bridge appears to be deteriorating, with many of the piers demonstrating severe levels of timber decay.

Figure 4.1 Northern approach associated with Towong Bridge.

Figure 4.2 Looking south towards the pier supports associated with the bridge

Figure 4.3 Looking north towards the northern abutment of Towong Bridge

Figure 4.4 North-facing view showing the decay to the base of the timber piers associated with Towong Bridge

Figure 4.5 **Detailed view of decay evident on the base of timber pier support located at the northern end of Towong Bridge**

Figure 4.6 **Northern approach associated with Towong Bridge showing the bitumen surface of the deck over the original timber decking**

5 ASSESSMENT OF SIGNIFICANCE

5.1 INTRODUCTION

An assessment of cultural significance seeks to establish the importance that a place has to the community. The concept of cultural significance is intrinsically tied to the fabric of the place, its history, setting and its relationship to other items in its surrounds and the response it evokes from the community.

5.2 BASIS FOR ASSESSMENT

The Burra Charter of Australia ICOMOS was formulated in 1979 (revised 1999 and 2013) [Australia ICOMOS 2013], based largely on the Venice Charter (for International Heritage) of 1966. The Burra Charter is the standard adopted by most heritage practitioners in Australia. The Charter divides significance into four categories for the purpose of assessment. They are: Aesthetic, Historical, Scientific/Technical, and Social significance.

The Heritage Council of NSW has established a set of seven criteria to be used in assessing cultural heritage significance in NSW, and specific guidelines have been produced to assist archaeologists in assessing significance for subsurface deposits (Heritage Council of New South Wales 2009; NSW Heritage Office 2001). The Heritage Council's criteria incorporate those of the Burra Charter, but are expanded to include rarity, representative value, and associative value.

In order to determine the significance of a historical site, the Heritage Council have determined that the following seven criteria are to be considered (NSW Heritage Office 2001):

- **Criterion (a):** an item is important in the course, or pattern, of NSW's cultural or natural history (or the local area);
- **Criterion (b):** an item has strong or special association with the life or works of a person, or group of persons, of importance in NSW's cultural or natural history (or the local area);
- **Criterion (c):** an item is important in demonstrating aesthetic characteristics and/or a high degree of creative or technical achievement in NSW (or the local area);
- **Criterion (d):** an item has strong or special association with a particular community or cultural group in NSW for social, cultural or spiritual reasons (or the local area);
- **Criterion (e):** an item has potential to yield information that will contribute to an understanding of NSW's cultural or natural history (or the local area);
- **Criterion (f):** an item possesses uncommon, rare or endangered aspects of NSW's cultural or natural history (or the local area); and
- **Criterion (g):** an item is important in demonstrating the principal characteristics of a class of NSW's cultural or natural places or cultural or natural environments (or the local area).

These criteria were designed for use on known or built heritage items, where above ground heritage is both tangible and easily identified. Due to the nature of archaeology being that it is invisible until disturbed, the presence and attributes of archaeological material must be assumed based on the recorded levels of disturbance, known site history and the creation of predictive statements. Ultimately, the actual presence of archaeological material can only ever be framed in terms of the potential for it to be present. The following assessment therefore deals with the built and archaeological potential within the study area in a consolidated manner.

5.3 LEVELS OF SIGNIFICANCE

The Heritage Act allows for the protection of heritage items of State or local significance. The levels of significance can be defined as:

- Items of State significance are of special interest in a State context. They form an irreplaceable part of the environmental heritage of NSW and must have some connection of association to the State.

- Items of local significance are of special interest to an LGA. They are important to the local community and often form an important part of the local identity. Collectively, such items reflect the cultural or natural history of the given area.

5.4 SIGNIFICANCE ASSESSMENT

The assessment has not identified any additional information that alters the significance of the item and, as a result, the heritage values of these items do not require reassessment. The existing statements of significance from the *Murray River Crossings Heritage Assessment: Towong Bridge* (Roads and Traffic Authority 1998) and Towong Bridge over Murray River (State Heritage Inventory 2004) are summarised in Section 5.5. Table 5.1 presents an assessment of the study area against the seven Heritage NSW criteria.

Table 5.1 Assessment of significance

Criteria	Assessment	Level of Significance
A	Towong Bridge is of local historical significance as a major piece of road infrastructure on an important local transport route. Since its construction in 1938, the bridge has provided a connecting link for those travelling between local towns in NSW and Victoria for 80 years and facilitated local travel and aided the local economy. Towong Bridge was one of many bridges constructed by the Department of Main Roads during the 1930s. Along with other road improvements, this bridge represents the beginning of an era of comfortable motor transport and efficient road transport of goods and produce in NSW.	Local
B	Towong Bridge was constructed by the Department of Main Roads and represents an example of the continuation of the construction of timber beam bridges in NSW.	Local
C	Towong Bridge is a timber beam bridge that is visually distinctive within the surrounding environment of the Murray River. The bridge remains largely unaltered following its construction in 1938. The attractive form and scale of the structure and natural timber materials allows the bridge to add to the aesthetic value of the surrounding rural landscape of the Upper Murray.	Local
D	Towong Bridge has social significance as it is crucial to the local community's sense of place. The bridge is widely recognised by the local community as a landmark and a structure of interest that provides a link between townships as well as two different states.	Local
E	The Towong Bridge is an example of a timber beam bridge that was constructed in a period during which this type of bridge was being largely replaced by reinforced concrete bridges throughout NSW. As such, the history of the construction of Towong Bridge can be used to analyse the historical transition between two different construction methods for bridges throughout NSW in the early 20th century. Furthermore, the visually simple structural form of Towong Bridge helps to identify it in structural terms and can be easily interpreted by non-technical observers. There is no known archaeological potential within the study area.	Local

F	The bridge is of rare technical significance on a local level as it represents the only functioning timber beam bridge that crosses the Murray River. It also represents a rare example of a functioning timber beam bridge in the Upper Murray region.	Local
G	Despite its poor structural condition, Towong Bridge is an excellent example of a timber beam bridge located in a rural town in the Upper Murray region. Towong Bridge is a good example of the once common timber beam bridge that was used as a standard bridge design on NSW roads in the late 19th century.	Local

5.5 STATEMENT OF SIGNIFICANCE

Towong Bridge is of local historical significance as it represents a major piece of road infrastructure on an important local transport route. Following its construction by the Department of Main Roads in 1938, Towong Bridge has provided a connecting link for those travelling between local towns in NSW and Victoria. The structure is widely recognised by the local community as a landmark and a structure of interest that provides a link between townships as well as 2 different states.

Towong Bridge consists of rare technical significance, representing the only functioning timber beam bridge that cross the Murray River.

While Towong Bridge is considered to meet Heritage Significant Criteria on a local level the bridge piers and supports are in poor structural conditions. The piers are severely decayed and the concrete wraps are essentially non-structural thereby compromising the piers structural capacity. In accordance with the Timber Truss Road Bridges conservation strategies (Roads and Traffic Authority 2011), this timber truss bridge is no longer suitable to be retained and is considered a potential safety risk. Therefore, the dilapidated conditions of the bridge have had detrimental effects on the heritage value of the item.

6 STATEMENT OF HERITAGE IMPACT

The purpose of this section is to present a comprehensive assessment of the impacts to the identified heritage values associated with the study area from the proposed works.

6.1 PROPOSED WORKS

The Towong Bridge piers and supports are in poor structural condition, and in 2016 RMS installed temporary pier and abutment supports in order to extend the life of the bridge by up to 5 years. The objectives of the temporary works at Towong Bridge were to remove the 15 tonne load limit that was imposed on the bridge in 2015 and to reinstate the previous load limit of 42.5 tonne, as well as to improve the safety of the bridge to road users and to maintain the integrity and functionality of a local heritage item. As stated in the REF prepared by RMS in 2016 for the temporary works, the extended life of the existing bridge was largely dependent on the ability of the bridge substructure to resist regular flooding events that are common on the Upper Murray River.

In 2020, SMEC Australia Pty Ltd was engaged by RMS to provide a concept design for the replacement of Towong Bridge with a new bridge over the same alignment. The key design features of the proposed new bridge included:

- Three-span road bridge along the existing alignment crossing the Murray River.
- Superstructure
  - 765 millimetre deep prestressed concrete super-T girders and a 200 millimetre thick *in situ* deck slab.
- Substructure
  - Integral connection to the superstructure at the abutment and piers
  - Bored reinforced *in situ* concrete piles.

The deck of the bridge will incorporate 2 traffic lanes and a 1.8 metre wide pedestrian walkway. The proposed design life of the new proposed bridge is 100 years.

The location of the proposed works are shown on Concept Plans that are contained in Appendix A. These plans were reviewed to formulate the proposed works assessed in this impact assessment.

Table 6.1 Documents used to formulate the impact assessment

Doc. / Drawing No.	Title	Version	Date
-	Replacement of Towong Bridge over the Murray River (B5947) Concept Design	03	18 June 2020
-	Roads and Maritime Specification PS301 Professional Services for Detailed Design Scope and Requirements	ED 2/ Rev 2	May 2020

6.2 DISCUSSION OF HERITAGE IMPACTS

The discussion of impacts to heritage can be centered upon a series of questions that assist in framing the nature of the potential impacts to a heritage item. The Heritage Manual guidelines *Statements of Heritage Impact* includes a series of questions which must be answered based upon the nature of the anticipated impacts (Heritage Office and Department of Urban Affairs & Planning 1996). The questions for demolition of a building or structure are the most applicable as the works outlined in Section 6.1 relate to the removal of Towong Bridge over Murray River, a heritage item listed on the Tumbarumba LEP as being of local significance. These are outlined in Table 6.2.

Table 6.2 Assessment against Statement of Heritage Impact questions

Question	Assessment
Have all options for retention and adaptive re-use been explored?	The piers and supports of Towong Bridge are in poor structural condition. In 2016, RMS prepared an REF for the proposal to extend the life of the existing Towong Bridge by up to 5 years by installing temporary pier supports. As part of this REF, it was determined by RMS that repair works to the bridge could only be considered a temporary solution given the severe deterioration of the existing pier supports. As such, it was determined that the retention and adaptive re-use of the bridge was not possible as it would not be able to meet the safety standards necessary for the continued use of the bridge.
Can all of the significant elements of the heritage item be kept and new development be located elsewhere on the site?	As a result of the severe deterioration of the pier supports associated with Towong Bridge, the decision to keep the heritage item as it stands would be considered unsafe. The REF prepared by RMS in 2016 for the temporary repair works of Towong Bridge stated that the maximum extended life of the bridge following the installation of temporary pier supports would be 5 years.
Is demolition essential at this time or can it be postponed in case future circumstances make its retention and conservation more feasible?	As stated above, the repair works that were undertaken at Towong Bridge in 2016 by RMS were necessary due to the poor structural condition of the pier and supports of the bridge. The installation of temporary pier supports in 2016 extended the life of the bridge to a maximum of 5 years. Given that this assessment has been prepared at the end of this 5 year period, it would be deemed unsafe to postpone the demolition of the bridge any further.
Has the advice of a heritage consultant's recommendations been implemented? If no, why not?	This assessment represents the advice and recommendations of the proposed works from a heritage standpoint. Following a review of the existing structural condition of the heritage item and the inability to improve the safety standards for the continued operation of the bridge, it was determined necessary to remove the bridge.

6.3 STATEMENT OF HERITAGE IMPACT

It has been determined by RMS that the Towong Bridge piers and supports are in poor structural condition and are indicative of considerable structural risk. Following the installation of temporary pier supports in 2016, which allowed an extension of the life of the bridge by up to 5 years, a concept design for the replacement of the bridge has been prepared. This entails the removal of the existing bridge and the construction of a new bridge along the existing alignment crossing the Murray River.

The proposed project works are described above and in more detail in Section 6.1. Given the severity of the deterioration of the pier supports, alternative options to maintain the function of the existing bridge beyond the five year extension period did not meet safety standards. As such, the removal of Towong Bridge and the construction of a new bridge are determined as critical for the safety of local and interstate travellers.

Following a review of the historical background of the study area and the proximity of the study area to the level of the river, no historical archaeological remains are likely to occur in the area of works. To ensure that unanticipated archaeological remains are not impacted, it is recommended that an unexpected finds process be adopted as part of personnel inductions.

This impact assessment has been prepared based upon a review of the documentation provided by TfNSW.

To conclude, the proposed project is considered consistent with the requirements outlined in the *Timber Truss Road Bridges* conservation strategies (Roads and Traffic Authority 2011) and is therefore acceptable from a heritage standpoint.

Furthermore, the *Timber Truss Road Bridges* conservation strategies (Roads and Traffic Authority 2011) has proposed the preservation of 26 timber truss bridges that would reflect the history and diversity of timber truss styles.

7 RECOMMENDATIONS

It is recommended that:

1. The development can proceed and is considered consistent with the strategic approach to conservation with regards to timber bridges being managed by TfNSW (Roads and Traffic Authority 2011).
2. Prior to the commencement of any construction or demolition works, the results of the site inspection should be outlined in the form of an archival recording prepared in accordance with Heritage Branch guidelines *How to Prepare Archival Records for Heritage Items and Photographic Recording of Heritage Items Using Film or Digital Capture* (Heritage Office 1998).
3. To ensure that impacts to known or unknown heritage values are mitigated during construction, all construction workers must be subject to an induction that details the kinds of historical relics, structures or deposits that may be encountered during the works and what the process should be if these are encountered. As such, the *Roads and Maritime Services: Standard Operating Procedure: Unexpected Archaeological Finds Procedure* (Roads and Maritime Services 2015) should be followed. In the event that suspected relics are encountered, all works in the immediate vicinity are to cease immediately and the Heritage Division be notified in accordance with Section 146 of the *NSW Heritage Act 1977*. A qualified archaeologist is to be contacted to assess the situation and consult with Heritage NSW regarding the most appropriate course of action.
4. Should the proposed development be altered significantly from designs and specifications outlined in this report then a reassessment of heritage/archaeological impacts may be required. This includes any impacts not explicitly stated in Section 6.1, and the installation of any subsurface services.

8 REFERENCES

Anon. 1996, *Regional Histories of New South Wales*, Heritage Office and Dept. of Urban Affairs and Planning.

Australia ICOMOS 2013, *The Burra Charter: the Australia ICOMOS Charter for Places of Cultural Significance*, Australia ICOMOS, Burwood, VIC.

'Country Road Tenders' 1937, *The Age*, p. 24.

Department of Main Roads 1976, 'Timber Beam Bridges in NSW'.

'District News - Tumbarumba' 1909, *The Albury Banner and Wodonga Express*, p. 2.

'Events in Cities and Towns' 1938, *The Argus*, p. 12.

'Government Gazette Notice' 1868, *New South Wales Government Gazette*, p. 271.

Heritage Council of New South Wales 2009, *Assessing significances for historical archaeological sites and 'relics'*, Heritage Branch, NSW Dept. of Planning, Parramatta, N.S.W., viewed 30 January 2019, <http://www.heritage.nsw.gov.au/03_index.htm>.

Heritage Office 1998, *How to prepare archival records of heritage items*, Heritage Office, Sydney, viewed 30 January 2019, <http://www.heritage.nsw.gov.au/docs/info_archivalrecords.pdf>.

'Intercolonial Items - The Towong Bridge' 1900, *The Albury Banner and Wodonga Express*, p. 28.

McMillan, Britton and Kell Pty Ltd 1998, *Study of Relative Heritage Significance of all Timber Truss Road Bridges in NSW.*, Unpublished Report to New South Wales Road Traffic Authority.

NSW Heritage Office 2001, 'Assessing heritage significance', viewed 1 May 2016, <http://www.environment.nsw.gov.au/resources/heritagebranch/heritage/listings/assessingheritagesignificance.pdf>.

'Opportunities for Business' 1937, *Construction and Real Estate Journal*, p. 5.

'Roads and Bridges - Works by Department of Main Roads' 1938, *The Daily Advertiser*, p. 3.

Roads and Maritime Services 2015, 'Standard Management Procedure: Unexpected Heritage Items'.

Roads and Maritime Services 2016, 'Towong Bridge temporary pier support works - Review of Environmental Factors'.

Roads and Traffic Authority 1998, 'Murray River Crossings Heritage Assessment: Towong Bridge'.

Roads and Traffic Authority 2011, 'Timber Truss Road Bridges; A Strategic Approach to Conservation'.

RTA 2000, 'Timber Beam Bridges - Study of Relative Heritage Significance of RTA Controlled Timber Beam Road Bridges in NSW'.

Schofield, C 1990, *Bombala. Hub of Southern Monaro*, Bombala Shire Council.

SMEC 2020, 'Replacement of Towong Bridge over the Murray River (B5947) Concept Design'.

State Heritage Inventory 2004, *Towong Bridge over Murray River*, *State Heritage Inventory*, viewed 28 April 2021, <https://apps.environment.nsw.gov.au/dpcheritageapp/ViewHeritageItemDetails.aspx?ID=4301070>.

'The Melbourne Markets' 1871, *The Argus*, p. 7.

'The Proposed Bridge at Towong' 1904, *Evening News*, p. 4.

'The Upper Murray Bridge Question' 1907, *The Albury Banner and Wodonga Express*, p. 41.

'Towong Hill and Khancoban NSW' 1933, *The Age*, p. 4.

'Tumbarumba Shire Council - Monthly Meeting' 1935, *The Albury Banner and Wodonga Express*, p. 39.

Tumut and District Historical Society 1965, 'Discovery and Early History of Tumut Valley'.

APPENDIX A

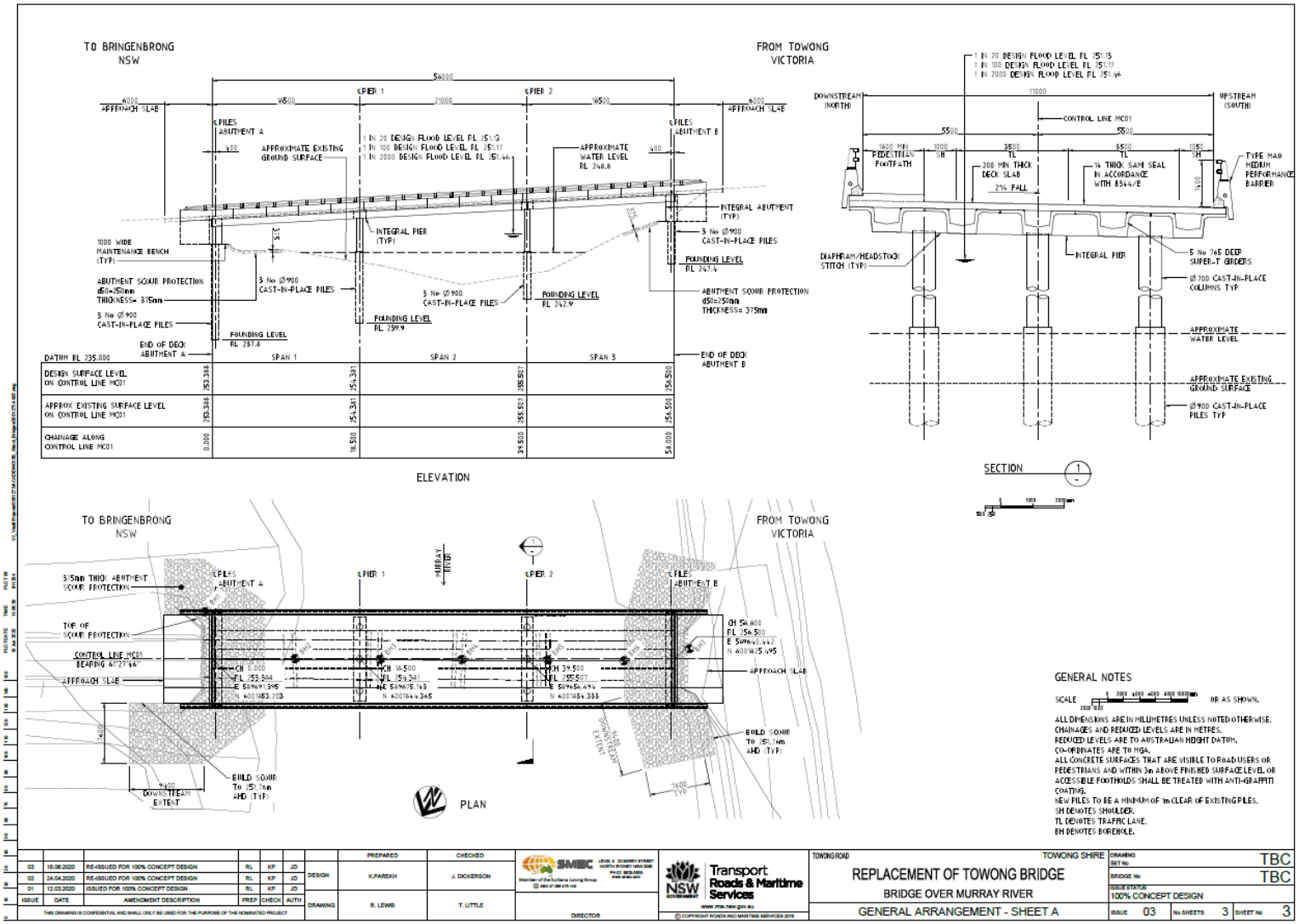

Figure 1 Proposed Towong Bridge cross-section.

HERITAGE INFORMATION SERIES

PHOTOGRAPHIC RECORDING OF HERITAGE ITEMS USING FILM OR DIGITAL CAPTURE

Heritage Office

ACKNOWLEDGEMENTS

This document was prepared by Lawrie Greenup in 2006 based on the original guidelines, *Guidelines for Photographic Recording of Heritage Items* produced by Don Godden for the Heritage Office in 1994.

DISCLAIMER
Any representation, statement, opinion or advice, expressed or implied in this publication is made in good faith but on the basis that the State of New South Wales, its agents and employees are not liable (whether by reason of negligence, lack of care or otherwise) to any person for any damage or loss whatsoever which has occurred or may occur in relation to that person taking or not taking (as the case may be) action in respect of any representation, statement or advice referred to above.

Heritage Office
Department of Planning
Locked Bag 5020
Parramatta NSW 2124
Ph: (02) 9873 8500
Fax: (02) 9873 8599
www.heritage.nsw.gov.au

© Crown copyright 2006

ISBN 1 921121 02 5

HO 06/03

Photographic Recording of Heritage Items

INTRODUCTION 5
WHAT YOU NEED TO KNOW ABOUT PHOTOGRAPHIC RECORDING FOR ARCHIVAL PURPOSES 6
PHOTOGRAPHER'S REQUIREMENTS 8
EQUIPMENT – FILM-BASED RECORDING 9
- **CAMERAS** 9
  - ***35mm Single Lens Reflex (SLR) Camera*** 9
  - ***Medium Format Cameras*** 9
  - ***Large Format Cameras*** 9
  - ***Lenses*** 9
  - ***Camera Accessories*** 10
- **FILM** 10
  - ***Black and White Film & Processing*** 10
  - ***Colour Transparency Film and Processing*** 12
  - ***Colour Negative Film or Prints*** 12
  - ***Storage of Black and White and Colour Transparencies*** 13

EQUIPMENT - DIGITAL RECORDING 14
- **DIGITAL CAMERAS** 15
  - ***35mm Single Lens Reflex (SLR) Digital Camera*** 15
  - ***Medium and Large Format Cameras*** 15
  - ***Lenses*** 15
  - ***Image Storage*** 16
  - ***Image File Size, Format and Digital Image Management*** 17
  - ***Digital Camera Accessories*** 17

PHOTOGRAPHIC METHOD 18
- **BASE PLAN** 18
- **SCALE RODS AND MEASURING STICKS** 19
- **RECORD OF PHOTOGRAPHIC METHOD** 19
  - ***Photographic Catalogue*** 19
  - ***Photographic Plan*** 20

PHOTOGRAPHIC TECHNIQUE 21
- **CONTEXT PHOTOGRAPHS** 21
- **RELATIONSHIP OF BUILDINGS ON SITE TO EACH OTHER** 21
- **INDIVIDUAL BUILDINGS OR STRUCTURES** 21
- **INTERNAL SPACES** 21
- **ITEMS AND RELICS** 22
- **ACCUMULATED CULTURAL MATERIAL** 22

FINAL PHOTOGRAPHIC IMAGE REPORT - FILM-BASED REQUIREMENTS 23
- **MINIMUM REQUIREMENTS FOR FILM PHOTOGRAPHIC REPORT** 23
- **MINIMUM REQUIREMENTS FOR FILM MATERIALS** 23
  - ***Black and White Film*** 23
  - ***Colour Transparencies*** 23
- **Digitisation of film material** 24

FINAL PHOTOGRAPHIC REPORT - DIGITAL REQUIREMENTS 25
- **MINIMUM REQUIREMENTS FOR DIGITAL PHOTOGRAPHIC REPORT** 25
- **MINIMUM REQUIREMENTS FOR DIGITAL MATERIALS** 25
  - ***Digital Thumbnail Sheets and Prints*** 25

STORAGE OF PHOTOGRAPHIC MATERIALS 26
- **PROOF SHEETS, SLIDES AND PRINTS** 26
- **CD-ROM OPTICAL MEDIA DISCS** 27

LODGEMENT OF FINAL FILM AND DIGITAL PHOTOGRAPHIC RECORDS 28

APPENDICES.....29
APPENDIX A - MODEL BRIEF FOR HERITAGE PHOTOGRAPHY.....30
APPENDIX B - CHECKLIST FOR PHOTOGRAPHIC REPORT.....34
APPENDIX C - FILM CATALOGUE SHEET.....35
APPENDIX D - PHOTOGRAPHIC PLAN SHEET.....37
APPENDIX E - USEFUL CONTACTS.....39
APPENDIX F - REFERENCES.....41

INTRODUCTION

These guidelines provide an outline for making a photographic record of sites, buildings, structures and movable items of heritage significance. They are particularly relevant to the recording of items of industrial or technological significance and domestic items and interiors.

Making a photographic record of a heritage place or object documents it for the future, before it is lost or changed, either by progressive alterations or by the ravages of time. Photographic records are often required by authorities such the Heritage Council of NSW or local councils as part of a conditional approval for work to be carried out on a heritage place, or, in some instances, before demolition.

This document revises the earlier guidelines on photographic recording published by the Heritage Council of NSW. It includes the use of both film-based and digital-based technology as acceptable methods of photographic recording for heritage purposes. The guideline takes into account changing photographic technologies, but provides a system that does not compromise the overall goal of a stable and long term photographic record. It addresses concerns about print permanency, long-term stability of digital storage media and software obsolescence, and has been written with safeguards in mind.

A recent development in colour prints, using specific archival inks and photographic paper, has shown, under accelerated ageing laboratory tests, to have long-term permanency similar to archivally processed black and white prints. Digital storage media and software obsolescence have been addressed by following the guidelines that have been developed by key Australian archival authorities.

WHAT YOU NEED TO KNOW ABOUT PHOTOGRAPHIC RECORDING FOR ARCHIVAL PURPOSES

What is a photographic recording?
A photographic recording is an archival record of a heritage place or object. Its purpose is to document a heritage item for future generations. Specific requirements on photographic equipment, archivally stable materials and photographic method aim to ensure optimum survival of the photographic record.

A photographic recording can be made using film-based technology, OR digital technology.

When is a photographic recording needed?
A photographic recording of an item on the State Heritage Register may be required by the Heritage Council of NSW as part of conditional approval for work to be carried out on the place or object, or before full or partial demolition. It can also be required as part of an archaeological investigation.

Local councils may also require a photographic recording be made of a heritage item on their local environmental plan as part of the approval process.

These guidelines have been written for items listed on the State Heritage Register, but may be cited by local councils as a reference document.

What are the requirements?
A model brief is provided to guide those commissioning or carrying out photography for heritage purposes [see page 30]. Below is a summary of the Heritage Council's final requirements for a photographic record of an item on the State Heritage Register. For more detailed information, turn to the page indicated:

Film-based Projects:

- Three copies of the photographic report including catalogue sheets, photographic plan, supplementary maps [see pages 18 & 23];
- B&W materials:
  - One set of archivally processed and numbered B&W negatives stored in archival sheets or envelopes [see page 23]
  - Three sets of archivally processed proof (contact) sheets, labelled and cross-referenced to the catalogue sheets [page 23];
- Colour materials:
  - Three sets of colour transparencies (either original transparency plus two duplicates or three original images taken concurrently) numbered, labelled and cross-referenced to the catalogue sheets and stored in archival slide sheets [see page 23].

Digital Projects

- Three copies of the photographic report including catalogue sheets, photographic plan, supplementary maps [pages 18 & 25];
- Three sets of thumbnail image sheets (e.g. A4 page with six images by six images) showing images and reference numbers. The thumbnail sheets should be processed with archivally stable inks on archivally acceptable photographic paper and cross referenced to catalogue sheets [page 25-26];
- Three copies of CD or DVD containing electronic image files saved as TIFF files with associated metadata, and cross-referenced to catalogue sheets [page 27];
- One full set of 10.5x14.8cm (A6) prints OR, if a large project, a representative set of selected images processed with archivally stable inks on archivally acceptable photographic paper [page 25].

How should the report be presented?
The report should be presented in a suitable archival binder and slipcase, and all storage of individual components must be in archival quality packaging suitable for long term storage. [page 26]

Has everything been included in the report?
Use our checklist to ensure that you include all the required elements of the report [page 34].

Where should the report be deposited?
The placement of material depends on whether the record was required by the Heritage Council or NSW, or a local council [see page 28 for details].

Reports required by Heritage Council	**Required by Local council**
First set: deposit at Heritage Office **Second set:** deposit with State Library of NSW for public access **Third set:** deposit with owner/client	**First set:** deposit at local council **Second set:** deposit with local council library for public access **Third set:** deposit with owner/client

PHOTOGRAPHER'S REQUIREMENTS

The photographer undertaking the recording of a heritage place needs to have:

- requisite training, skills and equipment to undertake heritage assignments;
- awareness that heritage sites and surrounds often have a range of hazards, which have to be considered in undertaking the photography, including:
  - dangerous substances
  - confined spaces
  - demolition activity
  - adverse environmental and weather conditions
  - moving machinery and vehicles
  - noise
  - dust
  - overhead hazards
  - remote locations
  - working at height, or over, near, on, in or under water;
- public liability insurance, as well as workers compensation Insurance (if assistants or support staff are used);
- an understanding of the requirements of the Occupational Health Safety and Rehabilitation (OHS&R) Act, a Hazard Control Plan and Work Safety Plan, and an understanding of environmental considerations generally;
- ability to meet the client's working and safety requirements. The photographer needs to visit the site prior to commencing the project. Preferably this should be with someone who has an understanding of the heritage photographic project. This allows the photographer to assess what photographic equipment is required, as well as being able to assess the site's safety requirements;
- access to safety clothing such as safety helmet, safety glasses, ear protection, highly visible safety vest, steel-toed boots or shoes. The client may have requirements for additional safety equipment for the photographer if working at heights or over or near water;
- materials for recording and documenting the photographic undertaking including such things as notebooks, pens, pencils, maps, torches and a compass;
- personal items such as sunscreen and insect repellent.

EQUIPMENT – FILM-BASED RECORDING

CAMERAS

35mm Single Lens Reflex (SLR) Camera

This is the most popular and versatile camera format and, when combined with quality lenses, is entirely adequate for most heritage photography.

There are a large number of brands available and the most suitable ones for heritage photography have the following specifications:

- full exposure control, especially manual control and the ability to override full autoexposure;
- range of shutter speeds, including the ability to take long exposures in dark places or dull light;
- remote release devices, such as cable releases and electronic releases, to minimize camera vibrations;
- mirror lock-up which is useful to stop camera shake, especially with larger lens;
- depth-of-field preview to see what's in or out of focus;
- connections for external flash.

Medium Format Cameras

Medium format cameras, especially SLR systems, are often used. However, these cameras are generally heavier and less versatile for field work than 35mm SLRs. The format is ideal if large, quality enlargements are required. Some types have interchangeable backs allowing one camera body to be used with different film types.

Large Format Cameras

Large format cameras are for specialised use, such as architectural photography, and are best when a slow and studied approach can be undertaken. Their bulk restricts their use in the field.

Lenses

The following deals primarily with 35mm SLR camera systems but the principles can be applied to both medium and large format camera systems.

A range of lenses with different focal lengths is required to cover all aspects of heritage photography. Either fixed focal length lenses or zoom lenses can be used and should cover the focal length range of 20mm – 300mm. The following is recommended:

- **fixed lenses:** 20mm, 28mm, 35mm, 50mm, 105mm, and 300mm focal length;

- **zoom lenses:** 18-85mm; 70-200mm; 1.4X or 2.0X extender lens. Other combinations can be used as long as they cover the 20mm – 300mm focal length range;
- **specialised lenses:** perspective control lens and macro lens for close-up images. Macro lenses are usually available as 50mm, 60mm, 105mm 180mm or 200mm focal lengths. These lenses can be substituted for fixed focal length lenses.

Only some of these lenses may be needed for a particular assignment.

Camera Accessories

These will vary depending on the project. Again, the following is relevant for both 35mm SLR cameras and medium and large format camera systems:

- tripod - heavy duty;
- flash units – one or more flash guns and slave unit;
- scale rods - for inclusion in the photographs, where appropriate;
- polarising and other filters;
- cable or remote electronic releases;

FILM

There is a range of black and white, colour transparency and colour negative films on the market. Films vary in their sensitivity to light. If the film is highly sensitive to light, it needs only a little light to form an image and is called a fast film. A slow film needs a lot of light to form the image so therefore is called a slow film. ISO is the standard way to indicate film speed or its sensitivity to light. A high ISO number indicates a fast film; a low ISO indicates a slow film.

Slower films are preferred for heritage photography as they give fine-grained images, with excellent contrast and sharpness. Sometimes faster films may be necessary because of low light conditions.

Most good quality, brand-name film from recognised manufacturers is acceptable.

Black and White Film & Processing

Black and white film, if properly processed and stored, is the preferred medium for archival recording. Slow and medium speed black and white films, 50 – 125 ISO, are preferred, although faster films, 400 ISO or faster, may be required under low light conditions.

Black and white films designed to be processed using the chromogenic C41 process are not acceptable because they are not sufficiently stable and are unsuitable for long term storage.

Processing Film for Long-term Stability

Careful processing of the negatives under clean and controlled conditions is the first step in achieving optimum long-term stability. This includes developing and fixing of the image followed by washing and drying of the negatives. Photographic companies producing black and white films have fact sheets outlining the correct procedures to follow in the processing of their film products. Film processing should be done by professional laboratories or by the photographer, if they have darkroom facilities.

The following steps should be followed for maximum image stability:

- **step 1 – developer** is used to develop the image. The appropriate film developer should be used to achieve the finest grain and sharpness;
- **step 2 – acid stop bath** is used to stop the action of the developer;
- **step 3 – fixer** fixes the visible, but unstable, image formed during the developer process. Best results with frequent agitation and adherence to recommended fixing times;
- **step 4 – good washing** in clean water is important for image stability;
- **step 5 – drying** in an environment that will avoid contamination by chemicals or dust.

Processing Contact Prints and/or Prints for Long-term Stability

As with film negatives, processing of black and white papers should be undertaken under clean and controlled conditions. The steps are similar to those followed for negatives. Again, photographic companies producing black and white films and papers have fact sheets outlining the correct procedures to follow in the processing of their paper products. Processing can be done by professional laboratories or by the photographer, if they have darkroom facilities.

The following steps should be followed for maximum image stability:

- **step 1 - developer** is used to develop the image;
- **step 2 – acid stop bath** stops development immediately, reduces the risk of staining, and will extend the life of the fixer bath;
- **step 3 - two-bath fixing** is best for both fibre-based and resin-based papers. Best results with intermittent agitation and adherence to recommended fixing times;
- **step 4 – good washing** in clean running water is important;
- **step 5 - drying** in an environment that will avoid contamination by chemicals or dust.

Either resin-coated or fibre-based photographic papers can be used. Optimum permanence is achieved with fibre-based papers, although they may not be as readily available. Long-term stability with fibre-based paper is ensured by adequate fixing and washing. This is achieved by following an optimum permanence sequence after and including **step 3.** The sequence is:

- **fixing** with intermittent agitation;
- **first wash** in fresh and clean running water;
- **rinse** with a wash aid with intermittent agitation, and;
- **finally washing** in fresh and clean running water;
- **drying** in an environment that will avoid contamination by chemicals or dust.

Colour Transparency Film and Processing

Colour transparency film (colour reversal film or colour slide film) should be taken, as well as black and white, because it provides colour information about the heritage item. Also, it can be digitally scanned and used in electronic presentations. The long-term stability of modern colour transparency film has improved considerably, although black and white is still the most stable.

Colour transparency film to be stored for maximum longevity should not be projected.

Slow and medium speed colour transparency films, 50 – 100 ISO, are preferred, although faster films, 400 ISO or faster, may be required under low light conditions.

Processing (E6 chemistry)

Colour transparency film needs to be developed using E6 processing. This should be done at recognised commercial laboratories which meet the quality assurance standards of the major film companies. This ensures consistent and professional results.

Colour Negative Film or Prints

Colour negative or print films using chromogenic C41, processing are not acceptable for heritage recording as their longevity is poor and they do not meet the permanence standards. Colour negatives and prints often fade, lack the detail and sharpness of colour transparency film, and have restricted contrast and colour range. *

Black and white prints produced by C41 processing have the same problems as colour negatives or prints.

Colour prints have a limited life as the colours are chemically unstable. However, they can be useful for digitising and for use in reports and publications. If colour prints are to be included as part of the archival recording, they should be labelled as such and, only be used to SUPPLEMENT the B&W film and colour transparencies .

Storage of Black and White and Colour Transparencies

The following conditions will ensure optimum survival of records:

- storage must be in archival quality packaging suitable for long-term storage. If plastic packaging is used it should be polypropylene, **not** PVC;
- black and white negatives can be stored in polypropylene sleeves which are manufactured to hold a range of image formats;
- black and white contact sheets can be stored in polypropylene sleeves, as can black and white prints. A range of sleeves, which take various image sizes, are available;
- colour transparency slides, both 35 mm and other formats, can be stored in polypropylene sleeves. Note that in a high humidity environment plastic sleeves can cause problems as they restrict air flow and stick to moist film emulsion. In circumstances where there are problems with high or fluctuating humidity store slides in appropriate and archivally suitable storage units.
- negatives, prints and slides require a temperature and humidity controlled environment for optimum long-term storage;
- annotate and cross-reference the negatives, contact sheets, prints and transparencies using archivally stable ink.

EQUIPMENT - DIGITAL RECORDING

A comparison between film-based recording and digital recording reveals many similarities, as well as differences. The following is a brief summary of some of the features of digital recording:

- **digital camera** – a camera is basically a box that holds a lens that focuses the image. With digital photography the camera converts the light to an electronic image. Further processing can be done within the camera to the captured image;
- **LCD Monitor** - major advantage of digital cameras is the image can be reviewed on the LCD monitor within seconds of taking the shot. This gives the photographer the opportunity to evaluate the image and re-take, if necessary;
- **histogram -** checking the camera's histogram, shown in the LCD monitor, enables the photographer to see and assess the brightness range of the captured image;
- **digital sensors -** digital cameras expose pictures using methods identical to film cameras. The sensitivity standards for both film and sensors are similar and the shutter and aperture mechanisms are the same;
- **memory cards -** instead of film, digital cameras use memory cards which are used to store the images. These come in a range of sizes; most have the capacity to hold more images than film. Images on a memory card can be deleted, transferred or kept any time. Once the images are transferred to a computer or other storage device, the memory card can be re-used;
- **ISO -** digital cameras can be set to record different light sensitivities or ISO speeds. This can be done at any time and the ISO setting can be changed from image to image. Technically, digital cameras do not have a true ISO, but for practical purposes a digital camera's ISO equivalent settings correspond to film;
- **noise and grain -** noise in digital photography is equivalent to grain in film photography. It appears as an irregular, sand-like texture and, if large, can be unsightly and hide details. This is undesirable in heritage photography and, as with film photography, lower ISO settings should be used where possible;
- **resolution -** in digital cameras resolution is expressed as the number of pixels contained in the sensor area, usually expressed as the number of megapixels (MP). Generally, the higher the number of pixels the higher the resolution and the corresponding increase in detail;
- **light settings -** digital cameras can automatically check the light and calculate the proper settings for the light's colour temperature. This is done based on an internal setting called the white balance. This enables digital cameras to be set to specific light conditions, such as daylight, shade, fluorescent or tungsten, removing the need for most filters.

DIGITAL CAMERAS

35mm Single Lens Reflex (SLR) Digital Camera

As with film photography this is the most popular and versatile camera format. Again, when combined with quality lenses and a range of accessories, the 35mm digital SLR camera is very suited to most heritage photography needs.

There are a number of brands available and the most suitable ones for heritage photography should have the following specifications:

- 8 megapixels or more resolution.
  NB A good quality 8 MP digital SLR camera can produce high quality A4 or A3 images or prints which are suitable for most heritage studies. If larger images or prints are required cameras with a 10 MP or more may be needed.
- ISO range 100/200 – 800 (noise reduction function an advantage);
- interchangeable-lenses;
- good image histogram;
- image shooting information – metadata;
- comprehensive viewfinder display;
- comprehensive flash control features;
- flexible white-balance controls;
- raw capture and high quality raw-conversion software;
- full exposure control, especially manual control and the ability to override full autoexposure;
- range of shutter speeds, including the ability to take long exposures in dark places or dull light;
- remote release devices, such as cable releases and electronic releases, to minimize camera vibrations;
- mirror lock-up, a useful device to stop camera shake, especially with larger lenses;
- depth-of-field preview to see what's in or out of focus;
- facilities for external flash.

Medium and Large Format Cameras

Digital backs are available for both medium and large format cameras.

Lenses

The following deals primarily with 35mm digital SLR camera systems but the principles can be applied to both medium and large format camera systems.

Digital cameras sensors can vary in size and are frequently smaller than a 35mm-film frame. If the sensor is smaller a focal-length magnification or lens conversion factor is applied to the focal length of the lens.

An example: a digital SLR camera has an APS sensor, which is smaller than a 35mm film-frame, and has a focal length conversion factor of 1.5X. This means a 50mm lens on the digital SLR camera would be equivalent to 75mm (50mm x 1.5 = 75mm) on a film SLR camera. Some digital cameras have a full size (35mm) sensor and, therefore, do not have to apply focal length conversion factor.

As with film or analogue SLR cameras, a range of lenses with varying focal lengths are necessary to cover all aspects of heritage photography. These can be either fixed focal length lenses or zoom lenses. Either fixed focal length lenses or zoom lenses can be used and should cover the focal length range of 20mm – 300mm.

As there is range of sensor sizes used in digital SLR cameras the lens focal lengths are given for a full size (35mm) sensor. The focal length conversion factor will need to be applied for cameras with smaller sensors.

- **Fixed lenses** (35mm equivalent): 20mm, 28mm, 35mm, 50mm, 105mm and a telephoto lens of 300mm focal length.
- **Zoom lenses** (35mm equivalent): 18-85mm; 70-200mm, 1.4X or 2.0X extender lens. Other combinations can be used as long as they cover the 20mm – 300mm focal length range.
- **Specialised lenses** (35mm equivalent): macro lenses are used for close-up images. Macro lenses are usually available as 50mm, 60mm, 105mm 180mm or 200mm focal length. These lenses can be substituted for fixed focal length lenses.

Only some of these lenses may be needed for a particular assignment.

Image Storage

Digital cameras use some form of removable storage, usually memory cards. Memory cards come in a range of sizes and the type to use varies between camera brands. The number of images stored depends on the capacity of the storage device and the resolution at which the image is taken.

As an example: - a 1GB memory card can store approximately 80-90 images captured in RAW format with an 8 MP digital SLR camera. This is equivalent to 2.2 rolls of 36 exposures of 35mm film. Cameras with higher resolutions than 8MP will have larger image size resulting in fewer images being able to be stored on the storage card.

The photographer needs to ensure there is sufficient storage capacity on the available memory cards to undertake the assignment.

The photographer in the field has two options:

(1) have sufficient capacity on the memory cards to be able to record images without having the need to transfer the images to another storage device; or

(2) use a portable downloader or have access to a computer, normally a portable laptop. The images can be transferred each time the storage card is full. Laptop can be a problem on difficult sites because of their weight and fragility.

Image File Size, Format and Digital Image Management

Heritage photography requires quality images and the photographer needs to make choices about image sizes, compression, and file formats. These choices determine the image quality and image file size.

The photographer should undertake the following:

- photograph at the highest quality;
- record image in RAW format to capture the maximum amount of information; and
- provide client with a copy of the image in RAW format and a copy converted to TIFF format, a universal format.
- **DO NOT** save images in JPEG format as this uses lossy compression which degrades the image to some extent.

There are a number of software packages which can be used to sort, label and file captured images. The labelling should relate to the specific project and to the catalogue sheets.

Digital Camera Accessories

These will vary depending on the project:

- tripod - heavy duty;
- flash units – one or more flash guns and slave unit;
- scale rod/s - for inclusion in the photographs, where appropriate;
- filters, such as polarising and UV filters;
- cable or remote electronic releases;
- additional batteries;
- battery charger.

PHOTOGRAPHIC METHOD

Every photographer has an individual technique. When photographing for the purpose of making an archival record, however, it is the information content rather than the artistic effect which is paramount. Photographs of a particular scene should be uncluttered with extraneous material and should emphasis the subject.

The photographer should be aware of all plans and documentary evidence available on the place and should have an understanding of its history and operations. This is especially important with industrial sites. Without this knowledge significant items may not be treated appropriately. If necessary, the photographer should be accompanied on the site by a person familiar with the site's heritage significance and the processes related to it.

The preferred shooting method is to proceed from the general to the specific. There are two methods which can be used.

1. In the first method the context photo is taken first, then the structures or items showing their relationship to each other, followed by the external facades of each building, the relationship of the elevations to each other and to all equipment or relics housed in each space. Internally, the main elevation of each room or space should be photographed. Finally, each piece of equipment in each space should be carefully and completely photographed.

2. In the second method, the external content photographs are taken initially and the individual buildings and relics are then photographed in a sequence determined by either geographic location, a precinct convention, or, in the case of industrial sites, by a material flow chart.

Whichever method is used the photographer must be aware of the appropriate sequence, and the site must be inspected and the project planned before commencement.

BASE PLAN

The photographer must be equipped with a map of the site on which each building, structure or movable item is shown. Each building, structure or movable item must be given its correct name or it must be denoted by a symbol such as a number or letter of the alphabet. Identify movable items. Where there are a number of buildings on a site, it may be necessary to draw each building separately. In some cases, each space may have to be drawn separately.

Some photographers like to draw a sketch plan themselves as it increase their awareness of the buildings and their contents.

SCALE RODS AND MEASURING STICKS

It may sometimes be useful to include a measuring stick placed in the plane of the photograph's subject which will serve as an indication of the relative scale. (Note: this will be essential for an archaeological excavation, but may not always be practical or necessary for other kinds of photographic recording.)

For large scale photographs the stick or rod should be similar to a field surveyors levelling staff, at least one metre long calibrated in bands from 10mm to 1 000mm wide. For photographs of smaller details prepare a ruler approximately 300mm long with calibrations from 1mm to 10mm. The markings on the scale rods must be bold to be able to be read in the print or slide.

RECORD OF PHOTOGRAPHIC METHOD

Photographic records are taken on behalf of a client and it is essential that the client, or the client's representative, is able to review the catalogue and be satisfied that the coverage is complete.

Photographic Catalogue

Each image must be catalogued. By adopting a set sequence the catalogue recording is much simpler. With film it is normal to assign a number or alphabetical prefix symbol to each type of film, then to number each roll of film and finally to number each frame. Digital images have a unique image file number.

It is normal practice to have a catalogue sheet and enter as much information as possible in the field. Further annotation may be made off-site if required. This may be done when the images are available to be viewed or it may be done simply by reference to the original field notes. The catalogue sheet is then typed. The typed version then becomes the image catalogue. In the case of film this is stored with the negatives and all copies of the contact sheets. With digital recording the catalogue sheet should be stored with the 'thumbnail' image sheet and the CD-R disc.

When cataloguing information for each image it is essential to record data in a consistent manner. Again, different photographers will vary the way they enter information in the catalogue. It is important that the method of entering the information remains the same throughout the project.

It is recommended that the catalogue sheets be specially prepared for each project. In the case of film photography the catalogue sheet should list the site name, date, photographer's name, camera type and lenses, film type, roll number and a description of each frame. Digital recording catalogue sheets need to list site name, date, photographer's name, camera type and lenses, image file number, and a description of each image.

See Appendices A-1 & A-2 for examples of photographic catalogue sheets.

Photographic Plan

A plan of the site, each building and of each space within the building should be obtained and each image or frame exposed should be entered directly on that plan. Each entry should show the position of the camera and the direction in which it was fired. (see Appendix B). The nomenclature should be identical to that used for the catalogue sheets. Normally, a map of the site or a plan of a building should be lodged with the catalogue sheet and contact sheet in the case of film photography or the catalogue sheet and 'thumbnail' image sheet with digital recording. The plan should have a north point which can be true north or a nominal north.

The plan should show the sequence in which the photographs were taken.

PHOTOGRAPHIC TECHNIQUE

CONTEXT PHOTOGRAPHS

Each site, place or movable item or collection should be recorded in its context. This means that the surrounding landscape with the site and structures in it should be photographed from several distant points. Buildings, rivers, landform and other items should be included and their relationship with the subject defined. Photograph the site, room or space where movable items are located and show how the items relate to each other and their setting. In some cases this will require 8-10 images.

RELATIONSHIP OF BUILDINGS ON SITE TO EACH OTHER

The spatial relationship of each structure to another, and to surrounding buildings or structures should be shown. This will allow functional connections to be recognised. Quite often, this can be done by placing the camera where four or five buildings are in view and taking a series of images radiating from the point where the photographer is standing. On a complex site five or six positions may be required before each building is defined in its relationship with those surrounding it. In other cases, one or two shots are all that are required.

INDIVIDUAL BUILDINGS OR STRUCTURES

External images should be taken of each façade with a perspective control lens or a telephoto lens where possible. Wide angle lenses tend to distort the perspective of building facades.

The detail of each façade should be approached in a logical manner usually working from the upper left-hand corner to the bottom right. Details such as eaves, soffits, rainwater heads, downpipes, window reveals and sills, doorways and steps, and balustrades will require individual treatment.

Where individual features are outstanding because of their form, texture, historic nature or condition, several images of one item may be necessary. This may include images taken from a distance as close as a few centimetres, in which case a macro lens will be required.

INTERNAL SPACES

Internal spaces of an individual building are usually more complex. Here knowledge of the operation of the space is essential. Images should be taken in a sequence to show all internal elevations, including floors and ceilings, where possible. Special attention should be placed on structural elements, fittings and any movable items. Do not forget spaces which are difficult to get to, such as the roof, basements, shafts and underfloor spaces.

ITEMS AND RELICS

Individual relics and movable items such as the machinery on an industrial site or furniture in a building should be photographed perpendicular to each face and from each corner. Where possible they should also be photographed from above or from a high vantage point. Normally each item is completely photographed before the photographer moves on to the next one.

Relics and movable items usually exist as assemblages, collections or systems and this should be taken into account by the photographer.

An **assemblage** is a relic or structure including all the artefacts, tools and items normally associated with it when it was operating. In the case of a workshop machine, it would include spanners and wenches used to tighten nuts, the tools needed to adjust gears or belts, the safety screens which prevent contact with moving parts and, if applicable, samples of completed or partially completed work. It also includes signs, pipe work and associated services.

The term **collection** describes a number of relics, movable items or structures which belong to a group because they perform the same function or produce the same finished product. Items in a collection are usually photographed concurrently.

A **system** is more than a collection of artefacts. It is an operational group of related relics or structures which cannot function effectively if any of them is removed. Where a system is being recorded the sequence in which the items are photographed will be determined by the operation of the system.

Photographers, who have not worked extensively in recording buildings and sites, should be walked through the complex before work starts by someone who knows the process related to the site.

ACCUMULATED CULTURAL MATERIAL

On some sites accumulated cultural material or rubbish may be so distracting that it has to be cleared before photography can be undertaken. Details may be partially obscured or completely hidden and a clean-up is essential. This is particularly necessary if the site has been vacant for some years and is subject to weed growth, bird infestations, squatters and vandalism.

Care should be taken not to disturb materials that are a legitimate part of the historic record. Material which appears disruptive to the photographer's eye and which belongs to a structure or relic, such as an oil can, may be relevant to the operation of the machine and should not be removed. It may, however, be repositioned if such action will not compromise the relationship of the items within the assemblage.

FINAL PHOTOGRAPHIC IMAGE REPORT - FILM-BASED REQUIREMENTS

MINIMUM REQUIREMENTS FOR FILM PHOTOGRAPHIC REPORT

When the survey is complete the minimum requirements for the **photographic report** and materials are:

- an introduction which explains the purposes of the report and gives a brief description of the subject, as well as details of the sequence in which photographs were taken. The report may also address the limitations of the photographic record and may make recommendations for future work;

- the report should include all technical details including camera and lenses, film types and processing, and photographic prints and processing;

- the report should also contain the catalogue sheets, photographic plan, and supplementary maps or plans.

MINIMUM REQUIREMENTS FOR FILM MATERIALS

Black and White Film

The minimum requirements for black and white film are as follows:

- one set of archivally developed and numbered negatives in strips and stored in archival sheets or envelopes;
- three sets of proof sheets, labelled and cross-referenced to the catalogue sheets.

The black and white negatives, one set of proof sheets, and one copy of the photographic report should be stored together in a public archive. One set of proof sheets and the photographic report should be stored together in a second archive. The final set of one set of proof prints and photographic report should be located with the client. (see section: Lodgement of Final Film or Digital Photographic Report for details)

In the case of movable items and collections, it is recommended to keep one set with the items and another in the archives.

Colour Transparencies

The minimum requirements for colour transparencies are:

- three sets of colour transparencies (either original transparency and two duplicate or three original images taken concurrently) numbered,

labelled and cross-referenced to the catalogue sheets and stored in archival slide sheets.

One set of transparencies (original images) together with the photographic report should be stored together in a public archive. The second set of transparencies (original or duplicates) with the photographic report should be stored together in a second archive. The final set of one set of transparencies (original or duplicates) and photographic report should be located with the client. (See Lodgement of Final Film or Digital Photographic Report on page 28 for details.)

In the case of movable items and collections, it is recommended to keep one set with the items and another in the archives.

Digitisation of film material

All film material, black and white negatives and prints, colour transparencies, and colour negatives and prints can be digitised by the use of scanners. Details relating to the use and storage of digital images are dealt with in the next section on the digital image report and placement of digital materials.

Australian National Library Guidelines for the digitisation of film-based materials are as follows:

- coloured photographic prints: 24 bits per pixel, 300 or 600 pixel per inch (PPI), RGB colour space;
- colour transparencies: 24 bits per pixel; 2000 PPI; RGB colour space;
- colour negatives: 48 bits per pixel; 2000 PPI; RGB colour space;
- black and white prints: 8 bits per pixel; 300 or 600 PPI; greyscale;
- black and white negatives: 8 bits per pixel; 3000 PPI; greyscale.

FINAL PHOTOGRAPHIC REPORT - DIGITAL REQUIREMENTS

MINIMUM REQUIREMENTS FOR DIGITAL PHOTOGRAPHIC REPORT

When the survey is complete the minimum requirements for the **photographic report** and materials are:

- a very brief report or introduction which explains the purposes of the report and gives a brief description of the subject, as well as details of the sequence in which images were taken. The report may also address the limitations of the photographic record and may make recommendations for future work;
- the report should include all technical details including camera and lenses, image file size and format, technical metadata associated with the images, and colour information;
- the report should also contain the catalogue sheets, photographic plan, and supplementary maps or plans.

MINIMUM REQUIREMENTS FOR DIGITAL MATERIALS

The minimum requirements for digital work are:

- three hard (paper) copies of the photographic report including catalogue sheets, photographic plan and supplementary maps;
- three sets of thumbnail image sheets (e.g. A4 photographic paper with six images by six images) showing images and file numbers. Thumbnail image sheets should be processed with archivally stable inks using approved archival photographic papers and cross-referenced to catalogue sheets;
- three copies of archival quality CD-R discs containing electronic images files and associated metadata, cross-referenced to catalogue sheets. If there are a large number of images, then DVD media can be used;
- one set of 10.5 x 14.8cm (A6), prints using archival quality paper and archivally stable inks. If the project is very large and includes a considerable number of digital images, key or representative images may be selected for reproduction at 10.5 x 14.8cm.

Digital Thumbnail Sheets and Prints

The thumbnail image sheets or prints should be printed on archival paper using archival inks or dyes. This will ensure optimal longevity.

Image stability, a problem in the past, is improving rapidly with new technology, improved inks and papers. A number of printer manufacturers offer printers which, with correct inks and specific papers, can produce prints with an expected life comparable to traditional black and white prints, provided storage conditions are suitable. These results are based on laboratory accelerated ageing techniques.

This technology is available through professional photographic laboratories.

Currently, there are three acceptable systems:

- Epson PictureMate Printers (or Epson equivalent) using Epson UltraChrome K3 inks and Epson archival photographic paper (Epson PictureMate paper (dye-based inkjet printing);
- Hewlett-Packard (HP) Photosmart Photo Printers (or HP equivalent) with HP Vivera Inks and HP Premium Plus photographic paper papers (dye-based inkjet printing); or
- FujiFlex utilising Fujicolor Crystal Archive Type One or Type Two Paper printed with Fuji Frontier digital minilab and Fuji washless chemicals(silver-halide colour prints).

Photographers are advised to check each company's website to keep up-to-date on improvements in printers, inks, chemical processing or photographic papers. In the future other companies may develop archivally acceptable methods.

Rather than relying on claims made by the various companies an objective assessment of the permanency of any particular system can be found at www.wilhelm-research.com

Costs may be similar to or slightly higher than that charged for producing film proof sheets and prints.

One-hour shops, particularly those using C-41 processing, are not suitable for producing prints acceptable for long-term storage.

STORAGE OF PHOTOGRAPHIC MATERIALS

PROOF SHEETS, SLIDES AND PRINTS

Proof sheets, slides and prints should meet the following storage standards:

- all storage must be in archival quality packaging suitable for long-term storage. If plastic packaging is used it should be polypropylene, **not** PVC;
- colour transparency slides, both 35 mm and other formats, can be stored in polypropylene sleeves. Note that in a high humidity environment plastic sleeves can cause problems as they restrict air flow and can cause the film emulsion to stick to the plastic. In these circumstances appropriate storage containers should be used;
- prints can be stored in polypropylene sleeves which are manufactured to hold a range of image formats;
- thumbnail image sheets (usually A4 size) can be stored in polypropylene sleeves;

- the photographic report and photographic materials should be stored in a suitable archival binder. These include a slipcase to ensure optimal survival and protection from the dust.

All printed material requires a temperature and humidity controlled environment for archival storage.

Any cross-reference notes and details associated with the prints or proof sheets should be written in pencil (preferably B) or with approved archival photo-labelling pen. Any writing should be restricted to the borders of prints or proof sheets.

CD-ROM OPTICAL MEDIA DISCS

With good care and maintenance a high quality CD-R disc is said to last around 30 years, although some manufacturers claim lifespan of 100 years plus. The difficulty is finding out which discs are best and knowing where the disc was manufactured. Another problem with CD-R is the technology may become obsolescent before the disc deteriorates, so the wisest option is to transfer the information to new media every 10 years.

DVDs are a storage option if the project is very large. Again, be careful to select a good quality DVD with long lasting qualities.

To ensure optimum life of CD-R discs and DVDs the following is suggested:

- use high quality CD-R discs or DVDs that are produced by a reputable brand and meet quality controlled manufacturing standards;
- burn CD-R or DVD at 1x or 2x speed to minimise data errors and then verify to make sure there are not data faults;
- it is recommended that TIFF images be saved as a Windows PC file rather than MAC. However, this should be determined with the client based on the client's computer system and future use..
- CD-R discs should be in plastic jewel cases which should be stored upright and under suitable storage conditions;
- CD-R discs should be labelled on their protective packaging rather than directly on the discs themselves;
- ensure CD-R are handled with due care, keeping them away from food, drink and dust. Never handle the underside of the disc and use the utmost care when handling the disc so as not to scratch the surface in any way. Gloves are recommended for the handling of archival discs;
- CD-R discs should never be bent or flexed and must be kept away from direct sunlight and stored vertically in their cases after use.

LODGEMENT OF FINAL FILM AND DIGITAL PHOTOGRAPHIC RECORDS

There should be three sets of the photographic report and film materials or digital materials. The place in which the material is lodged depends on whether the photographic project was requested by the NSW Heritage Council or local government. The following table summarises the lodgement details for photographic records.

Material	**Minimum requirements**	**Repository**	
		For Records Required by the Heritage Council of NSW	**For Records Required by a Local Council**
Black & White Film (plus any supplementary colour film)	• Three copies of photographic report • One set of negatives • Three sets of proof sheets and catalogue	Report + negatives + 1st set of proof sheets: Heritage Office Report + 2nd set of proof sheets: State Library of NSW Report + 3rd set of proof contact sheets: Owner/client	Report + negatives + 1st set of proof sheets: Local Council Report + 2nd set of proof sheets: Local Council Library Report + 3rd set of proof sheets: Owner/client
Colour Transparencies or Slides	• Three copies of photographic report • One set of original transparencies and two sets of duplicates OR • Three sets of original images taken concurrently	Report + original transparencies: Heritage Office Report + duplicate/concurrent transparencies: State Library of NSW Report + duplicate/concurrent transparencies: Owner/client	Report + original transparencies: Local Council Report + duplicate/concurrent transparencies: Local Council Library Report + duplicate/concurrent transparencies: Owner/client
Digital Materials	• Three copies of photographic report – paper copy • Three sets of thumbnails • Three CD-Rs • One set of selected 10.5x14.8cm prints	Report (paper) + thumbnails + CD-R + prints: NSW Heritage Office Report (paper) + thumbnails + CD-R: State Library of NSW Report (paper) + thumbnails + CD-R Owner/client	Report (paper)+ thumbnails + CD-R + prints: Local Council Report (paper) + thumbnails + CD-R: Local Council Library Report (paper) + thumbnails + CD-R: Owner/client

APPENDICES

A Model Brief for Heritage Photography
B Checklist for a Heritage Photographic Report
C Catalogue Sheet
D Photographic Plan Sheet
E Photographic Suppliers
F References

APPENDIX A - MODEL BRIEF FOR HERITAGE PHOTOGRAPHY

FILM RECORDING

PHOTOGRAPHER'S DETAILS		
Name		
Address		
Phone:	**Mobile phone:**	**Facsimile:**
Email:		
Recent Heritage Jobs:		
Contact/s (re recent heritage assignments**)**		
Name:		
Contact Details:		

PHOTOGRAPHIC ASSIGNMENT DETAILS
Assignment Outline:

ASSIGNMENT REQUIREMENTS		
Public Liability Insurance	**Yes/No**	**Amount:**
Additional Requirements:		
Copyright/Image Ownership:		

FILM REQUIREMENTS		
Start:	**Finish:**	**Report:**
Camera/s:		
Lenses:		
Accessories:		
Film:	**Black & White**	
	Colour Transparency	
Processing:	**Black & White**	
	Colour Transparency	
Archival Materials:	**Boxes**	
	Sleeves	
	Paper	

Signatures (agreeing to above requirements and/or conditions**)**

Photographer **Client**

SAMPLE MODEL BRIEF FOR HERITAGE PHOTOGRAPHY FILM RECORDING

PHOTOGRAPHER'S DETAILS		
Name	Allan Person	
Address	PO Box 000 Suburb NSW 2000	
Phone: 02 0000 0000	**Mobile Phone**: 0000 000	**Facsimile**: 02 0000 0000
Email: john.smith@server.com.au		
Recent Heritage Jobs:	Federation House 2006	
	Wooden Rail Bridge 2005	
	Sewerage Pumping Station 2004	
Contacts [regarding recent heritage assignments]		
Name:	Kate Individual	
Details:	Sydney Archival Agency	
	Phone: 02 0000 0000	
PHOTOGRAPHIC ASSIGNMENT BRIEF		
Assignment Outline: Weatherboard House [a] Photography of house prior to demolition [b] Photographic requirements include cameras, wide angle, standard and telephoto lenses; film - black & White & colour transparencies required [c] Final report to use approved archival standard materials		
ASSIGNMENT REQUIREMENTS		
Public Liability Insurance	**Amount:** $5 000 000	
Additional Requirements: [a] completion & signed Heritage Office Client Checklist; [b] adherence to contract details unless changes agreed to by requisitioning authority; [c] work safety plan; [d] on-site induction; [e] confined spaces training or accompanied by qualified person		
Copyright/Image Ownership:	Images property of client	
FILM REQUIREMENTS		
Start: date/month/year	**Finish**: date/month/year	**Report:** date/month/year
Camera/s: Camera type/s – Single Lens Reflex		
Lenses: 21, 24, 35, 50, 85, 135, 200 & 300mm		
Accessories: filters, tripods, measuring sticks, flash		
Film:	Black & White	Ilford Delta 100 & Ilford delta 400
	Colour Transparency	Fuji Velvia 100
Processing:	Black & White	negatives & proofs sheets to archival standard
	Colour Transparency	E6 – professional laboratory
Archival Material:	Boxes	Approved archive storage boxes
	Sleeves	Approved archival protector pages
	Paper	Acid-free

Signatures:
Photographer: **Client:**

MODEL BRIEF FOR HERITAGE PHOTOGRAPHY DIGITAL RECORDING

PHOTOGRAPHER'S DETAILS		
Name		
Address		
Phone:	**Mobile phone:**	**Facsimile:**
Email:		
Recent Heritage Jobs:		
Contact/s (re recent heritage assignments**)**		
Name:		
Contact Details:		
PHOTOGRAPHIC ASSIGNMENT DETAILS		
Assignment Outline:		
ASSIGNMENT REQUIREMENTS		
Public Liability Insurance	**Yes/No**	**Amount:**
Additional Requirements:		
Copyright/Image Ownership:		
DIGITAL REQUIREMENTS		
Start Date:	**Finish Date:**	**Report Due:**
Camera/s:		
Lenses:		
Accessories:		
Storage Media:		
Proof Sheets:		
Archival materials:	**Boxes**	
	Sleeves	
	Paper	

Signatures: (agreeing to above requirements and/or conditions**)**

Photographer: **Client:**

SAMPLE MODEL BRIEF FOR HERITAGE PHOTOGRAPHY DIGITAL RECORDING

PHOTOGRAPHER'S DETAILS		
Name	Allan Person	
Address	PO Box 000 Suburb NSW 2000	
Phone: 02 0000 0000	**Mobile Phone**: 0000 000 000	**Phone**: 02 0000 0000
Email: allan.person@server.com.au		
Recent Heritage Jobs:	Federation House 2006	
	Wooden Rail Bridge 2005	
	Sewerage Pumping Station 2004	
Contacts [regarding recent heritage assignments]		
Name:	Kate Individual	
Details:	Sydney Archival Agency	
	Phone: 02 0000 0000	
PHOTOGRAPHIC ASSIGNMENT DETAILS		
Assignment Outline: Weatherboard House [a] Photography of house prior to demolition [b] Photographic requirements include cameras, wide angle, standard and telephoto lenses; sufficient on-site storage media cards. [c] Digital report to consist of paper copy, proof 'thumbnail' sheet/s, prints stored on approved electronic storage media [d] Paper copy, proof sheets & digital storage media in approved archival materials		
ASSIGNMENT DETAILS		
Public Liability Insurance	**Amount:** $5 000 000	
Additional Requirements: [a] completion & signed Heritage Office Client Checklist; [b] adherence to contract details unless changes agreed to by requisitioning authority; [c] work safety plan; [d] on-site induction; [e] confined spaces training or accompanied by qualified person		
Copyright/Image Ownership:	images property of client	
DIGITAL IMAGING REQUIREMENTS		
Start:: date/month/year	**Finish**: date/month/year	**Report:** date/month/year
Camera/s: Brand Name Digital Camera - Single Lens Reflex [minimum 8.0 MP]		
Lenses: 21, 24, 35, 50, 85, 135, 200 & 300mm [35mm equivalent]		
Accessories: filters, tripods, measuring sticks, flash		
Storage Media:	Approved CD or DVD	
Proof Sheets:	Brand name archival ink/Brand name archival photographic paper	
Archival material:	Boxes	Approved archive storage boxes
	Sleeves	Approved archival protector pages
	Paper	Acid-free

Signatures:
Photographer: **Client:**

APPENDIX B - CHECKLIST FOR PHOTOGRAPHIC REPORT

PROJECT NAME:		
FILM-BASED PROJECTS		
	Yes	**No**
Is there a hardcopy report?		
Does the B&W report contain:		
[a] a set of B&W negatives and proof sheet/s?		
[b] negatives & proof sheets sleeved in archival protective pages?		
[c] B&W prints [if required] sleeved in archival protective pages?		
[d] cameras, lenses, and accessories details?		
[e] film types and archival processing details?		
[f] map showing photographic location and direction of images?		
[g] list of all images, correctly numbered and described?		
Does the colour image report contain:		
[a] a set of colour transparencies, correctly numbered & described		
[b] each set stored in archival protective pages?		
[c] cameras, lenses, and accessories details?		
[d] film types and archival processing details?		
[e] map showing photographic location and direction of images?		
[f] list of all images, correctly numbered and described?		
Is the photographic material and report labelled correctly?		
Are the boxes/folders/containers made of archivally acceptable material?		
Are there two separate containers for B&W and colour material?		
Were the B&W negatives, proof sheets and prints archivally processed?		
Is the paper used in the report acid-free?		
DIGITAL PROJECTS		
Is there a hardcopy report?		
Does the hardcopy report contain:		
[a] thumbnail proof sheet processed in an archivally acceptable method?		
[b] proof sheet properly sleeved in archival protective pages?		
[c] appropriate electronic storage media with report and images?		
[d] cameras, lenses, and accessories details?		
[e] map showing image location and details?		
[f] list of all images, correctly numbered and described?		
Is there an electronic report?		
How is the information stored?		
[a] CD Rom – what type		
[b] DVD – what type		
[c] Other		
Can the storage media be opened?		
Is the information the same as that contained in the hardcopy report?		
Are the images saved as TIFF files, contain metadata and follow guidelines?		
If not, what is the file format & where have they diverted from guidelines?		
Is the storage media filed in an acceptable container?		
Is there a back-up copy stored with the hardcopy report?		
Is there a full set of 10.5 x 14.8 (A6) images processed with archivally stable inks and paper?		
Comments for either film and/or digital reports:		

APPENDIX C - FILM CATALOGUE SHEET

Project Name:	
Camera:	**Film Type:**
Film No.	**Photographer:**
Comments:	

Image No.	Date	Lens	Details (1)

1. include details of the structures and/or object captured on film and direction from which image was photographed

DIGITAL IMAGE CATALOGUE SHEET

Project Name	
Camera:	**Lenses**
Sensor size:	**35mm lens equivalent (1):**
Image Folder:	**Photographer:**
Comments:	

Image File No. (2) & (3)	Date	Site (4)	Details (4)

1 35mm-equivalent focal length is the relation between the digital sensor and 35mm film coverage.
2 file numbering systems vary between various camera brands.
3 image file number, date, lens focal length, exposure compensation, flash and other details are recorded in the metadata file which must be included with or linked to the image file.
4 relates to the site or position from which image was taken as recorded on the Photographic Plan Sheet.
5 this information is not recorded on in the metadata.

APPENDIX D - PHOTOGRAPHIC PLAN SHEET

Project Name:		
Date:		**Photographer:**
Camera:		**Lens/es:**
Film No/s.	**Frame Nos:**	**Film Type:**

1. The Photographic Plan Sheet can be used for both black & white and colour film images. Many photographers will have their own established system which will be satisfactory provided all the information can be cross-referenced to the Photographic Catalogue Sheets.

2. With digital photography each location can be labelled as a site which should then be included in the appropriate Photographic Catalogue Sheet cross-referenced to the appropriate digital file number. In this case remove the text File No/s and Frame Nos and substitute Site No.

3. The side of the building or structure closest to true north can be used as 'nominal north' for the purpose of describing the directions in which the images were taken. This is easier than trying to work out exact directions in relation to true north.

SAMPLE PHOTOGRAPHIC PLAN SHEET

Project Name: Sample		
Date:		**Photographer:**
Camera:		**Lens/es:**
Film No/s.	**Frame Nos:**	**Film Type:**

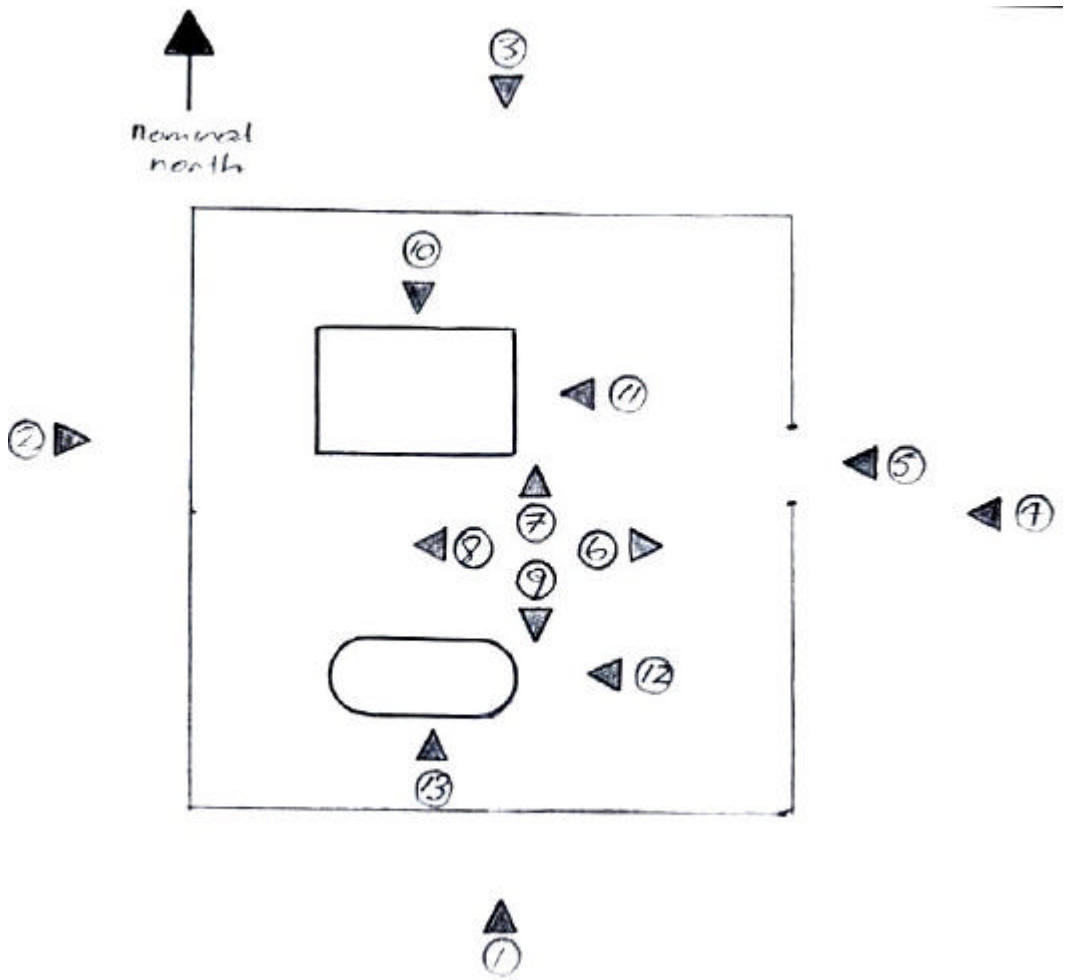

1. The Photographic Plan Sheet can be used for both black & white and colour film images. Many photographers will have their own established system which will be satisfactory provided all the information can be cross-referenced to the Photographic Catalogue Sheets/.

2. With digital photography each location can be labelled as a site which should then be included in the appropriate Photographic Catalogue Sheet cross-referenced to the appropriate digital file number. In this case remove the text File No/s and Frame Nos and substitute Site No.

3. The side of the building or structure closest to true north is used as ‘nominal north’ for the purpose of describing the directions in which the images were taken. This is easier than trying to work out exact directions in relation to true north.

APPENDIX E - USEFUL CONTACTS

Pro Labs – film and print processing
The list below includes some of the major photographic labs that undertake film and digital processing in NSW and is intended as a directory only. The inclusion of a person or business should not be taken to imply their endorsement by the Heritage Office, Department of Planning, or the Heritage Council of NSW.

Photographers should check the specifications and archival quality of services provided. Rural photographers can also check company websites for details on mail order services.

Campsie Digital Lab*†
Unit 3/9 Elizabeth Street
Campsie NSW 2194
Ph: 02 9718 8667‡
Fx: 02 9789 1564
www.digitalprolab.com.au

Created for Life Print Studio
2/14 Barralong Road
Erina NSW 2250
Ph: 02 4365 1488
Fx: 02 4367 0850
www.createdforlife.com

Icon Imageworks*
3/52 Champion Road
Tennyson Point NSW 2111
Ph: 02 9966 8781
Fx: 02 9966 87 86
www.iconcom.com.au

Photo King Professional
173 Alison Road
Randwick NSW 2031
Ph: 02 9310 0340
Fx: 02 998 5199
www.photking.com

The B&W Lab Big Image*
71 Palmer Street
Cammeray NSW 2062
Ph: 02 9957 4933
Fx: 02 9957 1828

The Lighthouse BPS Pty Ltd*
2/219 Bondi Road
Bondi NSW 2066
Ph: 02 9365 6063
Fx: 9365 6013
www.thelighthousebps.com.au

Vision Graphics
88 Pitt Street
Redfern NSW 2016
Ph: 02 9319 3300
www.visiongraphics.com.au

Vision Graphics
2B Northcote Street
St Leonards NSW 2065
Ph: 02 9902 4000
www.visiongraphics.com.au

* Black & white processing services provided

ARCHIVAL MATERIAL SUPPLIERS

[archival photographic sleeves and storage boxes]

Albox Australia Pty Ltd
56 North Terrace
Kent Town SA 5067
Ph: 08 8362 4811
Fx: 08 8362 4066
www.albox.com.au [retailer supplier list for all states and territories]

Archival Survival Pty Ltd
Ph: 1300 781 199
email: info@archivalsurvival.com.au

Prints & Images
77 Keppel Street
Bathurst NSW 2795
Ph: 02 6332 4410
Fx: 02 6332 6770
email: cottagegate@bigpond.com

Preservation Australia
PO Box 210
Enmore NSW 2042
Ph: 1300 651 408
Fx: 1300 651 406
www.preservationaustralia..com.au

Shared Memories
PO Box 6
Sans Souci NSW 2219
Ph: 1300 554 229
www.sharedmemories.com.au

The Photo Album Shop
105 Hunter Lane
Hornsby NSW 2077
Ph: 9476 2610
Fx: 9476 5192
www.photoalbumshop.com.au

APPENDIX F - REFERENCES

Personal contacts

- Murray Fagg – Australian National Botanical Gardens
- Erica Ryan - National Library of Australia
- Andrew Long – National Library of Australia
- Sheryl Jackson – National Archives of Australia
- Richard Neville – State Library of NSW
- Scott Wagon – State Library of NSW
- Tony Sillavan – Sydney Water
- Jon Breen - Sydney Water (retired)
- Chris Cane – The Lab
- Alan Ward – Vision Graphics

National and State Guidelines

- Australian National Botanical Gardens
    - Photograph Collection Policy
- National Archives of Australia
    - Digital Preservation Guidance Note 3 - Care, Handling and Storage of Removable Media
    - Archives Advice 6 - Protecting & handling optical discs
    - Archives Advice 7 - Protecting & handling photographs
    - Archives Advice 7 - Protecting & handling objects
- NSW Heritage Office
    - Guidelines for Photographic Recording of Heritage Items 2004
- National Library of Australia
    - Still Image Digitisation at the National Library
    - Traditional Format Library Materials
- State Library of New South Wales
    - Digital practice: Guidelines for digitising images in NSW public libraries
- State Library of Queensland
    - Digitisation Policy
- Victorian State Government
    - Electronic Records Strategy – Forever Digital

Magazines

- Australian Photography
- Better Pictures
- Outdoor Photography
- Practical Photography
- Photography Monthly
- ProPhoto

Books, Press Releases and Information Sheets

- Fujifilm Professional Complete Film Line-up for Professionals
- Kodak 2004 Press Release – Kodachrome Film Availability
- Ilford Fact Sheet 2001 Processing B&W Fibre Based Paper
- Ilford Fact Sheet 2002 The Ilford Black & White Photographic Chemical Range
- Ilford Fact Sheet 2002 Processing B&W Resin Coated Paper
- International Digital Enterprise Alliance Inc.2004. DISC Metadata for Digital Image Submission
- Photograph Australia with Steve Parish – Film and Digital Photography Steve Parish Publishing Pty Ltd 2003
- The B&W Lab Big Image 2006 Price List

Websites

Guidelines and Policy

www.anbg.gov.au Australian National Botanical Gardens Photograph Collection Policy
www.archives.com National Archives (USA)
www.asmp.org The Universal Photographic Digital Imaging Guidelines
www.cr.nps.gov. National Register of Historic Places and National Historic Landmarks Survey Photo Policy Expansion March 2005
www.diglib.org Technical Guidelines for Digitizing Materials for Electronic Access
www.nmnh.si.edu CoPAR Bulletin 14 – Creating Records That Will Last
www.montana.edu Experts Give Tips for Preserving Photos
www.prov.vic.gov.au Victorian Electronic Records Strategy – Forever Digital
www.nla.gov.au National Library of Australia
www.naa.gov.au National Archives of Australia
www.tasi.ac.uk Basic Guidelines for Image Capture and Optimisation
www.williamsphotographic.com Archival and Storage Issues

Archival Albums and Storage Materials

www.photoalbumshop.com
www.preservationaustralia.com.au

Archival inks, papers, printers and image longevity

www.epson.com.au Epson's New Ultrachrome Ink
www.epson.com.au Technical Brief – Epson Archival Inks
www.fineartgicleeprinters.org Discussion on the color gamut of the new UV pigmented inks from Hewlett-Packard for HP DesignJet 5000 and 5500ps for photorealistic and fine art giclee prints
www.inksupply.com MIS archival Pigments
www.photoreview.com.au The Test of Time
www.wilhelm-research.com Permanent care of colour photographs: traditional & digital, colour prints, colour negatives, slides & motion pictures

Digital storage media

www.cdmediaworld.com CD-R Quality
www.disctronics.co.uk CD-ROM Specification
www.melbpc.org.au How long will a CD-R last?
www.sro.wa.gov.au Preservation Notes – Keeping CDs Safe
www.cdmediaworld.com CD-R Quality

Digital photography – working with images
www.arisedition.com Creating a Digital Master
www.gbbc.org.uk Bit Depth and File Size, File Size and Resolution
www.pictureaustralia.org Australian Heritage Photo Library; ACT Heritage Library
www.scantips.com A Simple Way to Get Better Scans
www.wildlifephoto.net Digital Workflow

Cameras - film and digital
www.canon.com.au
www.hasseblad.com.com
www.horsemanUSA.com
www.konicaminolta.com
www.kyocera.co.jp
www.linhof.de
www.nikon.com
www.olympus.com
www.pentax.com
www.sigma.com
www.sinarcameras.com
www.tamron.com

Software
www.adobe.com

Printers and inks
www.digitalfilm.com
www.epson.com.au
www.fujifilm.com
www.hp.com.au
www.lyson.com

Film and digital processing and printing
www.icon.com.au
www.imx.nl Kodak Kodachrome: a critical appraisal and its role in the future
www.visiongraphics.com.au
www.thelabsydney.com

Appendix F

Aboriginal Desktop Risk Assessment

AUSTRAL ARCHAEOLOGY

Reference: 21016
13 August 2021

Nadine Caff
Cardno
Environmental Scientist
34/205-207 Albany Street North
Gosford NSW 2250

Dear Nadine,

RE: ABORIGINAL DESKTOP RISK ASSESSMENT FOR TOWONG BRIDGE REPLACEMENT PROJECT, NEW SOUTH WALES

Austral Archaeology Pty Ltd (Austral) has been engaged by Cardno on behalf of Transport for NSW (TfNSW) to provide Aboriginal Desktop Risk Assessment (ADRA) for the proposed for the Towong Bridge Replacement Project located on Towong Road at the border of New South Wales (NSW) and Victoria (the study area). This advice is intended to assist TfNSW in determining their obligations with regards to the *National Parks and Wildlife Act 1974* (NPW Act) and *Victorian Aboriginal Heritage Act 2006* to determine whether the project will involve activities that may harm Aboriginal objects or places.

This assessment will comply with Stage 1 of the *Roads and Maritime Services Procedure for Aboriginal Cultural Heritage Consultation and Investigation* (Roads and Maritime Services 2011) [PACHCI]. Where an activity is likely to harm Aboriginal objects or places, consent in the form of an Aboriginal Heritage Impact Permit (AHIP) or approved Cultural Heritage Management Plan (CHMP), is required.

NEW SOUTH WALES

Section 87 of the NPW Act makes it a strict liability offence to knowingly or unknowingly harm Aboriginal objects or declared Aboriginal places without an AHIP. Harm is defined under the NPW Act as "*any act or omission that destroys, defaces or damages the object or place or in relation to an object, moves the object from the land on which it had been situated*". The NPW Act allows for a person or organisation to exercise due diligence in determining whether their actions will or are likely to impact upon Aboriginal objects or places. Any person or organisation who can demonstrate that they have exercised due diligence, such as the steps undertaken under Stage 1 of the PACHCI has a defence against prosecution under the strict liability provisions of the NPW Act.

The *National Parks and Wildlife Regulation 2009* (NPW Regulation) adopted the *Due Diligence Code of Practice for the Protection of Aboriginal Objects in NSW* (DECCW 2010) (the Code). The Code sets out the reasonable and practicable steps that individuals and organisations need to take to:

- Identify whether Aboriginal objects are, or are likely to be, present within the study area.
- If Aboriginal objects are, or are likely to be present, determine whether their activities are likely to cause harm.
- Determine whether further assessment or an AHIP application is required for the activity to proceed.

This ADRA is therefore prepared under Stage 1 of the PACHCI and the Code. This report will form part of a Review of Environmental Factors (REF) that is being prepared by Cardno on behalf of TfNSW under Part 5.1 of the *Environmental Planning and Assessment Act 1979* (EPA Act).

It is based on the robust desktop assessment conducted to determine whether Aboriginal objects or places are present or are likely to be present within the study area. It includes a thorough search to understand if the project would have any effect on the known Aboriginal sites or places through AHIMS search. The report also includes the geographical and landforms study of the project area

to assess the presence of any significant cultural landscapes and availability of natural resources. This has been achieved through the completion of a desktop review for the archaeological reports and research in the study area.

VICTORIA

The *Aboriginal Heritage Act [Amended 2016] 2006* provides blanket protection for Aboriginal cultural heritage within Victoria. If any Aboriginal objects (artefacts), sites, places or skeletal remains are identified before or during development works, they cannot be harmed until either a Cultural Heritage Permit (CHP) to harm, or a Cultural Heritage Management Plan (CHMP) that specifically permits harm to that place has been prepared and approved by either with First Peoples - State Relations (FPSR) [formerly Aboriginal Victoria] or the approved Registered Aboriginal Party (RAP) for the land within which the activity area is situated. In this instance there is currently no appointed Registered Aboriginal Party (RAP).

The Victorian *Aboriginal Heritage Regulations 2018* (the Regulations), specifically, Regulation 7 specify when a mandatory CHMP is required. This is when "*(a) all or part of the activity area for the activity is an area of cultural heritage sensitivity; (b) and all or part of the activity is a high impact activity*". Determining whether a CHMP is required depends on whether the works are considered an exempt activity. The proposed works are considered exempt under r.15(2) of the Regulations as they consist of works on, over or under an existing roadway and under r.15(2)(b) as maintenance or repair works associated with an existing high impact activity. Therefore, a mandatory CHMP is not required.

STUDY AREA

The Towong Bridge (study area) is located on the border of NSW and Victoria. It is situated over the Murray River and links Upper Murray Road, a local road in Victoria, to Towong Road, a local road in NSW. Within NSW, the bridge is within the road corridor bounded by Lot 7, DP19863 to the north and Lot 8, DP19863 to the south-east. A small portion at the southern end of the study area is situated across the Victorian border and lies within the entirety of Lot 8A-G/PP5799, in the eastern portion of Lot 1\H\PP5799, Lot 2\H\PP5799 and the western portion of Lot 11C-J/PP5799.

The study area lies within the Snowy Valleys Council Local Government Area (LGA). The location of the study area is shown in Figure 1, Figure 2 and Figure 3. The study area is located within the parish of Bringenbrong in the county of Selwyn. The study area also comes within the boundaries of the Bega Local Aboriginal Land Council (BLALC).

PROPOSED WORKS

The proposed works include the construction of a new Bridge. It involves the construction of an 11 metre wide, 3-span Super-T-girder bridge on the current alignment incorporating 2 traffic lanes and a 1.8-metre wide pedestrian walkway (SMEC 2020).

The construction of the works will significantly disturb the ground both surface and sub-surface. It will involve activities including grading and removal of topsoil, trenching, removal of vegetation and substantial earthworks within the study area. Therefore, there is a need to undertake further investigations into the potential for Aboriginal cultural material to be present.

HERITAGE DATABASE SEARCH

An extensive search of the AHIMS database was conducted on 27 April 2021 (Client service ID:586206). The search identified 3 Aboriginal archaeological sites within a 10-kilometre search area centred on the proposed study area on the NSW side. None of these sites are located within proximity to the study area. The mapping coordinates recorded for these sites were checked for consistency with their descriptions and location on maps from Aboriginal heritage reports where available. These descriptions and maps were relied on where notable discrepancies occurred.

Whilst a detailed search of the Victorian Aboriginal Heritage Register (VAHR) database was not able to be completed, this means that detailed site descriptions or reports could not be accessed due to the access requirements associated with the VAHR. Austral was able to review via the VAHR, the mapping for areas of cultural heritage sensitivity concerning the study area. The location of VAHR sites (but not any detailed information) are visible as part of the cultural heritage sensitivity

mapping layer available through the VAHR, a review of this layer indicates that there are no known sites within or close to the works. The study area is considered to be within an area of cultural heritage sensitivity as it is located within 200 metres of the Murray River (Regulation, 26(1)). The study area being located within an area of cultural heritage sensitivity does not alter the works being considered an exempt activity and a CHMP is not required. Care will need to be taken if significant ground disturbances are to take place ouside of the road corridor.

Identified sites from the AHIMS database search are summarised in Table 1 and identified in Figure 4. There is a general lack of archaeological reports associated with the study area on the NSW side of the study area.

Table 1 Summary of AHIMS sites identified within 10 kilometres of the study area.

Name	AHIMS #	Type	Location	Cadastral Boundary
Bringenbrong Property	61-3-0066	Burial - Open site	Located on the property near the Alpine way road at Bringernbrong, NSW. Located 7.5km south-east of the study area	Lot 2 DP 1160187
Bringenbrong Property	61-3-0067	Burial – Open site	Located on the property near the Alpine way road at Bringernbrong, NSW. Located 7.5km south-east of the study area	Lot 2 DP 1160187
Tooma Bringenbrang RD 1	61-3-0069	Scarred tree	Located on a property to the west of Tooma Road, situated 3.4km east of the study area.	Lot 171 DP 551690

ACTIVITIES IN AREAS WHERE LANDSCAPE FEATURES INDICATE THE PRESENCE OF ABORIGINAL OBJECTS

Austral has undertaken a review of information to identify whether the activity is located within landscape features likely to contain Aboriginal objects. This includes an assessment of ethnographic information, soils, geology, landform, disturbance and resource information pertinent to the study area. The outcome of this review is outlined in Table 2.

Table 2 Assessment of landscape features

Information	Details
Ethnographic	Establishing a direct certain connection of the study area with one particular group mainly depends on the ethnographic details recorded by the early European settlers in the region. Earlier research indicates the study area was occupied by Dhudhuroa people on the Victorian side of the river and Walgalu people on the NSW side of the study area (Tindale 1974). Since most of the study area is for the NSW side of the study area, details about the Walgalu people is outlined below. The Walgalu people, also spelt as the Walgadu or known as the Wolgal Wolgah, Tumut tribe, Tumut River people, and the Gurmal, occupied land which extended from around the headwaters of the Murrumbidgee and Tumut rivers and covered the upper Murray, near Mount Kosciuszko in the north. Neighbouring people in NSW were the Ngarigo to the south, the Diljamatang to the west, and the Jaimathang to the south-west. Howitt (1904) described how the Walgalu people lived on the tablelands of the highest parts of the Australian Alps and in the region on the north. Other information about the Walgalu language is scarce. The language is recorded as partly resembling the Dhudhuroa/Duduroa language and partly the Dyirringan/Djiringanj which was spoken from Nimmitabel to Bega (Blake, B.J & Reid 2002). Studies by Flood in 1980 records the movement of Aboriginal people gathering in the alps to exploit the Bogong moth, while also hunting kangaroos, possum and wallabies (Flood 1980).
Soils	The entire study area is located within the Tensols (alluvial) soil. Tenosol soils are classified as a weak soil profile in the A-horizon and have limited subsoil (B-horizon) development, with less than 15% clay content. They have low agricultural potential due to low chemical fertility, poor structure and low water holding capacity. Tenosols are further classified into three categories in the North-eastern region of Australia: • Chernic Tenosols • Orthi Tenosols • Leptic Tenosols Chernic Tenosols are seen with a well-developed organic A-horizon overlying a weakly developed subsoil horizon. They are commonly seen in sub-alpine and alpine high plains and broad mountain ridges. These soil types are strongly acidic with low pH's value as low as 3.8. Orthic Tenosols are seen in the area of lower rainfall. These soils often tend to merge with Kandosols. Leptic Tenosols are seen on fine textured alluvium soil along the major streams. They have well structured humic layer with no significant pedogenic development (Agriculture Victoria 2021) (Figure 5).
Geology	The geology of the study area consists of Quarternary floodplain deposits (Figure 6).
Landform	The predominant landform in the study region is associated with the floodplain of the Murray River. It is situated within Murray Channels and Floodplains of the Mitchell landscape classification system (Figure 7) which is characterised by active channels and seasonally inundated floodplains of the Murray. The study area is part of the Australian Alps Bioregion which consists of several of the highest mountains in Australia including Mt Kosciuszko, which is located approximately 200km south-east of the study area. Due to the presence of rolling to upland hills and mountains in the region, there are different levels of erosion and soil deposition along the Murray resulting in valleys, billabongs, swamps, channels, levees and source bordering dunes with relief to 10m. The presence of hills and freshwater sources in the general region is considered ideal and of high potential for the presence of aboriginal heritage. However, this is countered by the presence of floodplains alongside the Murray River which would not be suitable for long term occupation by Aboriginal people.

Information	Details
Disturbance	The study area has undergone significant disturbance due to the historical usage of the area since the time of the earliest European settlement in the region. The traditional way of using the land was changed to a different pattern following the arrival of European settlers. The first Europeans to explore the area were Hume and Hovell during the late 1820s. Soon after, squatters arrived along the river and native vegetation was cleared and agricultural activities were introduced. These changes impacted the soil condition of the study area. The discovery of gold led to a large number of people migrating to the region, which created the need for the urban development of the area. This was followed by the construction of urban infrastructure in the form of the road alignment which runs through the study area. The construction of the Bridge began in 1937 following numerous requests by the local community ('Towong Hill and Khancoban, NSW' 1993). The current land use of the study area predominantly revolves around the road alignment and ongoing use of Towong Bridge. These historical and current land-use patterns have disturbed and changed the cultural landscape of the study area. In NSW, the level of ground disturbance meets the description of disturbance in the Code. In Victoria, significant ground disturbance is defined under r.4 of the Regulations as meaning disturbance of the topsoil or surface rock layer of the ground; or a waterway by machinery in the course of grading, excavating, digging, dredging or deep ripping, but does not include ploughing other than deep ripping. This is elaborated upon in the *Practice Note: Significant Ground Disturbance* (Aboriginal Victoria 2018), which indicates that significant ground disturbance needs to be substantial and widespread. Whilst the bridge and roadway construction is likely to have resulted in significant ground disturbance within their respective impact footprints, likely, other portions of the study area where lesser activities have taken place may not meet the burden of proof required to establish significant ground disturbance in a Victorian context.

DESKTOP ASSESSMENT CONCLUSION

The desktop assessment for the presence of Aboriginal heritage within the study area shows limited potential for Aboriginal cultural material to be present within the study area.

Background research shows that the Murray River was culturally significant through forming a boundary between different traditional owner groups and through the numerous resources which the river provided. Studies by Flood indicate tribal movement along the river for different activities. Ethnographical material has shown the aboriginal occupation of the area and it may contain Aboriginal cultural heritage material. However, the presence of frequently scoured floodplains and the levels of disturbance caused by the construction and ongoing use of the bridge are likely to have caused significant levels of disturbance which will have removed all evidence of Aboriginal cultural material from within the study area.

On the basis of the above information, it is therefore concluded that no further actions need to be undertaken in regards to managing potential impacts to Aboriginal cultural material within the study area as part of the proposed construction works. However, it is recommended that this be reconsidered in the event that construction plans are altered, especially if there is a need to undertake works outside of the existing road corridor that may result in significant ground disturbance that would alter the conclusions within this report.

RECOMMENDATIONS

Based on the information contained in this report, the following recommendations are made in regard to Aboriginal heritage:

- No further Aboriginal archaeological investigations are required on the NSW side of the bridge.
- No further archaeological investigations are required in Victoria as the works are considered an exempt activity.

Please do not hesitate to contact me on 0490 190 290 if you wish to discuss any aspect of this submission.

Yours sincerely,

Alexander Beben

Director

Austral Archaeology

M: 0490 190 290

E: alexb@australarch.com.au

1. REFERENCES

Aboriginal Victoria 2018, 'Aboriginal Heritage Act 2006 Practice Note: Significant Ground Disturbance.'

Agriculture Victoria 2021, *Tenosols*, *Agriculture Victoria*, viewed 29 April 2021, <http://vro.agriculture.vic.gov.au/dpi/vro/gbbregn.nsf/pages/soil_soil_gbb_tenosols>.

Blake, B.J & Reid, J 2002, *The Dhudhuroa language of northeastern Victoria, Aboriginal History*.

DECCW 2010, '*Due diligence code of practice for the protection of Aboriginal objects in New South Wales*'.

Flood, J 1980, *The Moth Hunters: Aboriginal Prehistory of the Australian Alps*, Australian Institute of Aboriginal Studies.

Howitt, AW 1904, *The Native Tribes of South-East Australia*, MacMillan and Co. Limited, London.

Roads and Maritime Services 2011, 'Procedure for Aboriginal Cultural Heritage Consultation and Investigation', <https://www.rms.nsw.gov.au/documents/about/environment/protecting-heritage/managing-development/roads-and-maritime-services-procedure-for-aboriginal-cultural-heritage-consultation-and-investigation.pdf>.

SMEC 2020, 'Replacement of Towong Bridge over the Murray River (B5947) Concept Design'.

Tindale, N 1974, *Aboriginal Tribes of Australia*, Australian National University, Canberra.

'Towong Hill and Khancoban, NSW' 1993, *The Age*.

Figure 1 Location of Study Area

21016 Towong Bridge

Source: NSW LPI Aerial

Drawn by: AH Date: 2021-04-29

AUSTRAL ARCHAEOLOGY

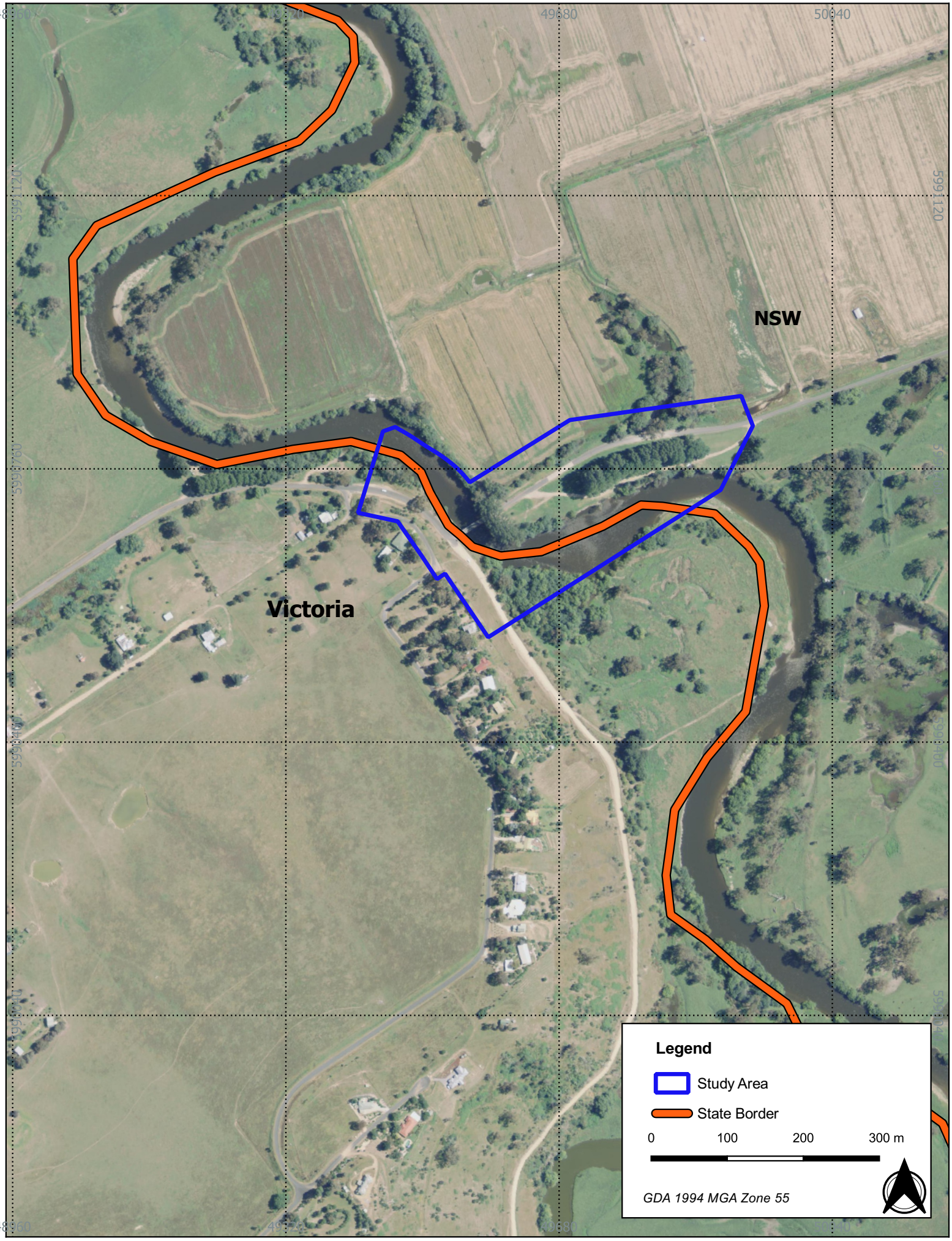

Figure 2 Detailed aerial of the study area

21016 Towong Bridge

Source: NSW LPI Aerial

Drawn by: AH Date: 2021-04-20

AUSTRAL ARCHAEOLOGY

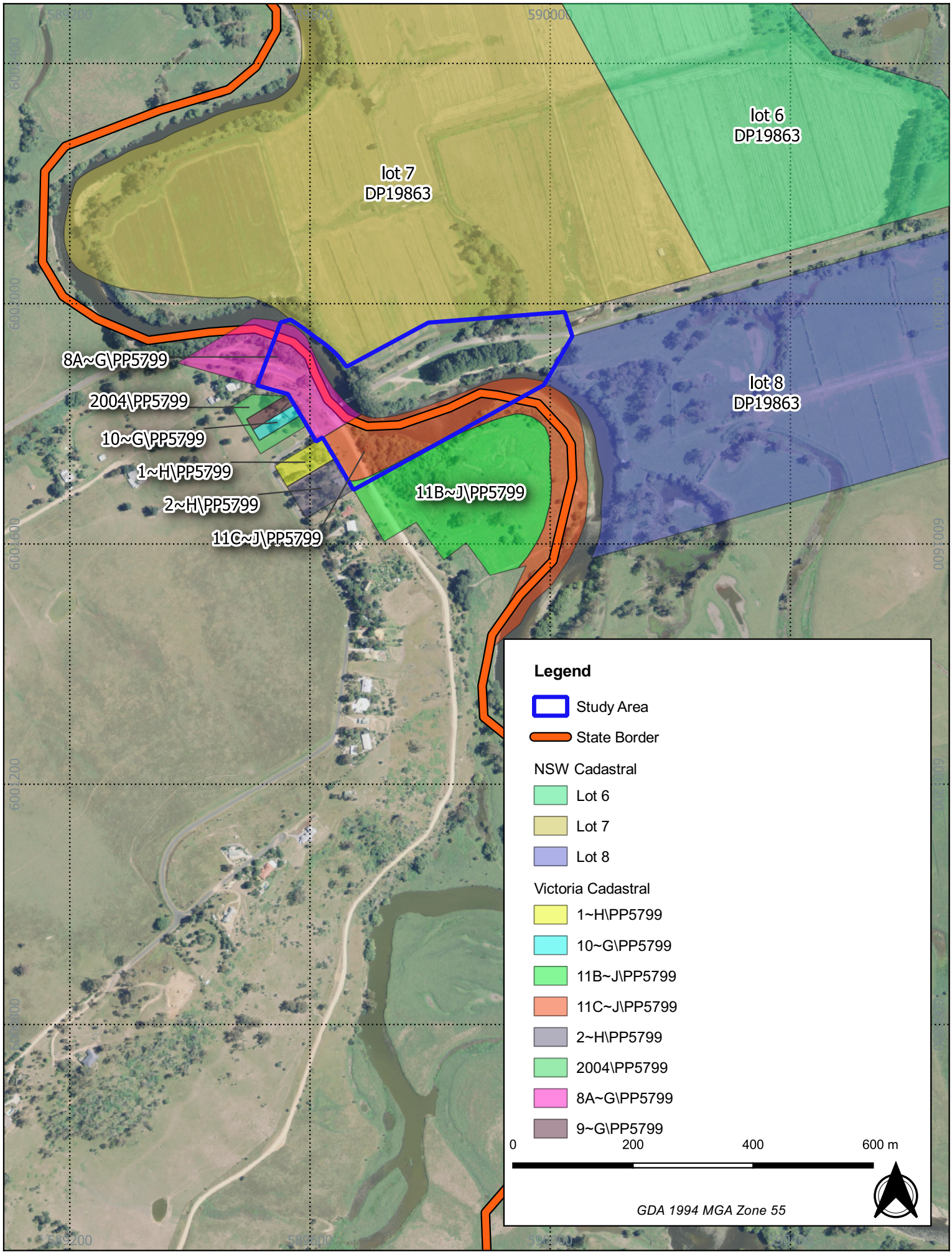

Figure 3 Cadastral boundaries surrounding the study area 21016 Towong Bridge

Source: NSW LPI Aerial *Drawn by: AH Date: 2021-04-20*

AUSTRAL ARCHAEOLOGY

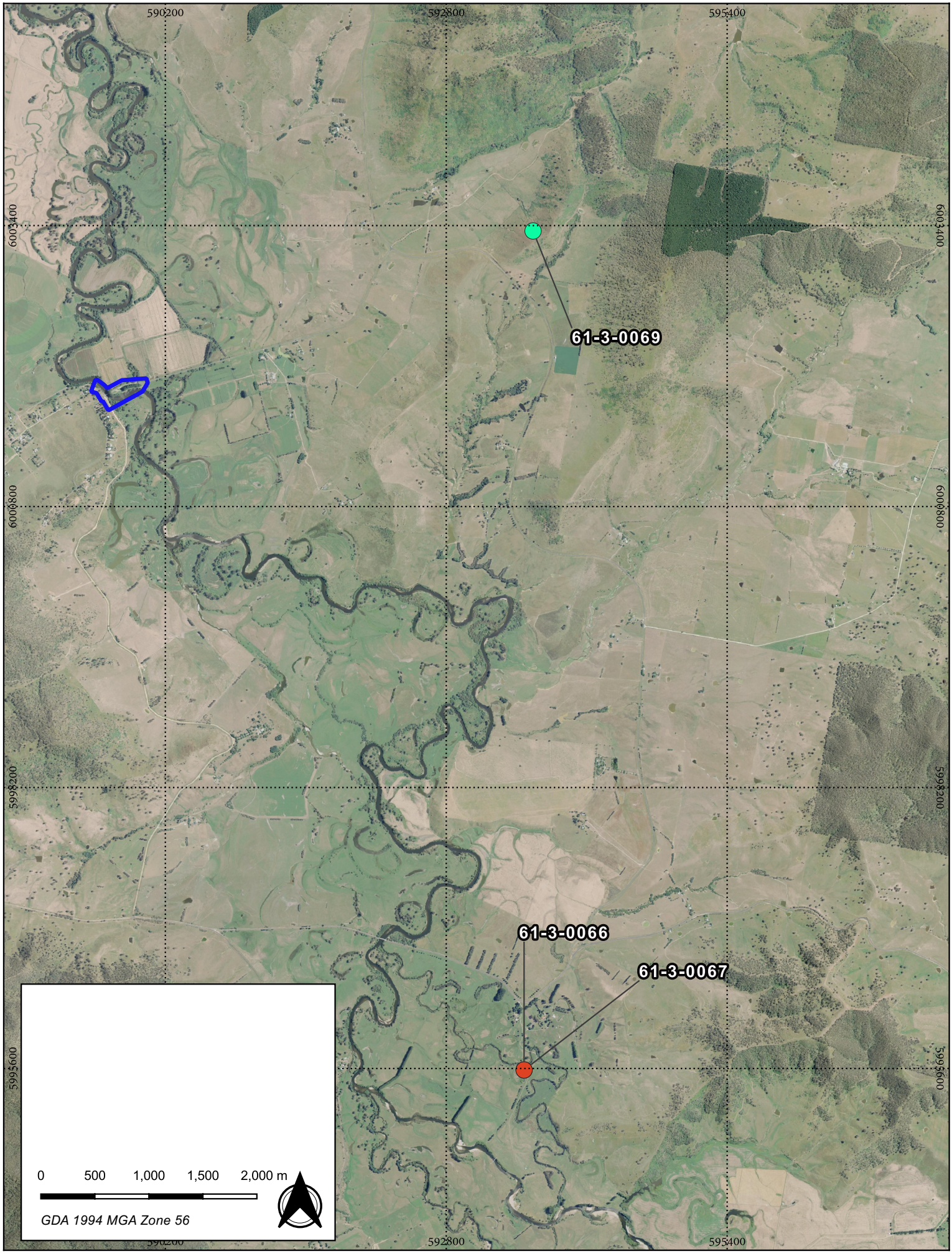

Figure 4 AHIMS located within 10km of study area

21016 Towong Bridge

Source: NSW LPI Aerial, AHIMS *Drawn by: SS Date: 2021-07-05*

AUSTRAL ARCHAEOLOGY

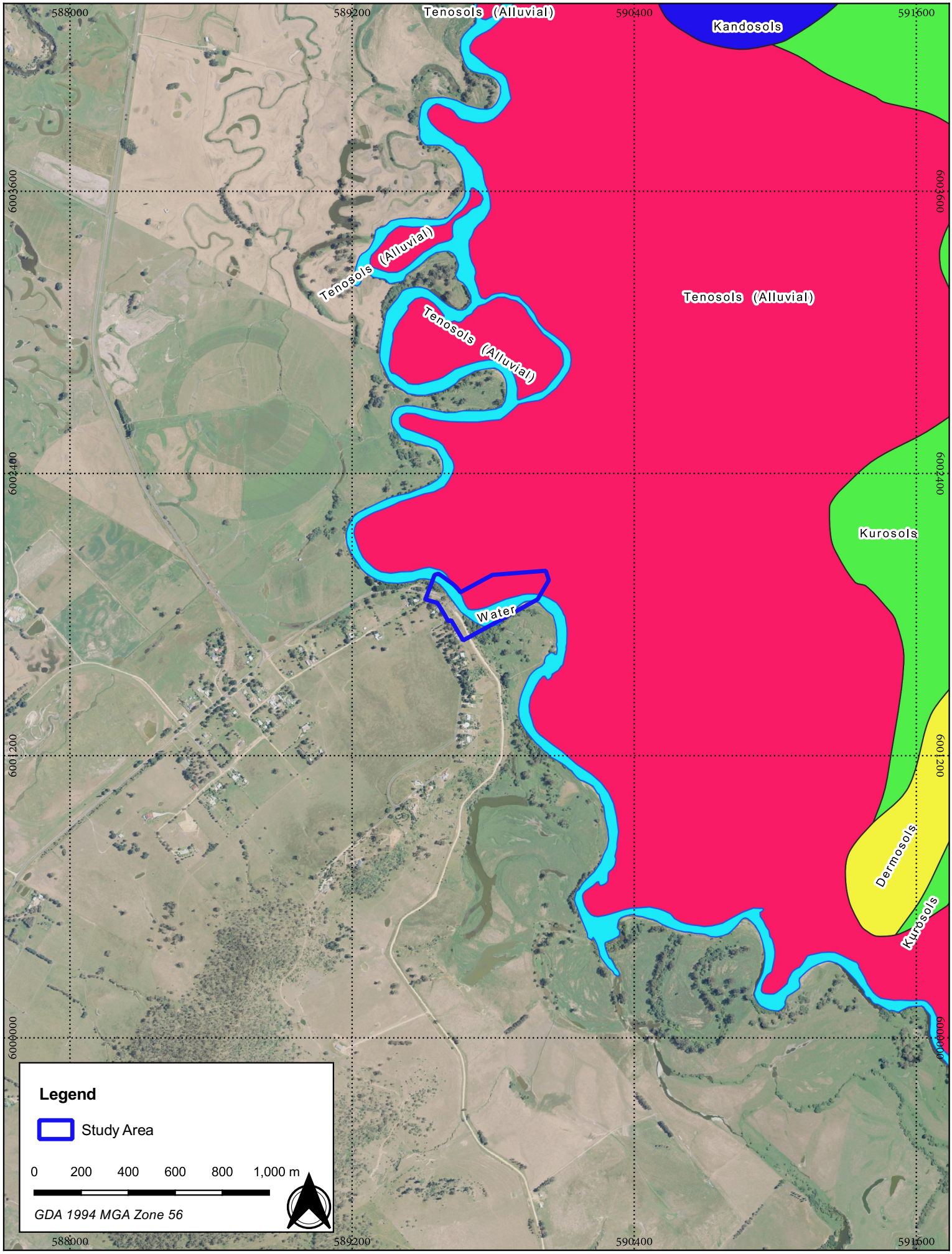

Figure 5 - Soil landscapes identified within the study area

21016 Towong Bridge

AUSTRAL ARCHAEOLOGY

Source: NSW LPI Aerial, NSW Spatial Services *Drawn by: SS Date: 2021-04-28*

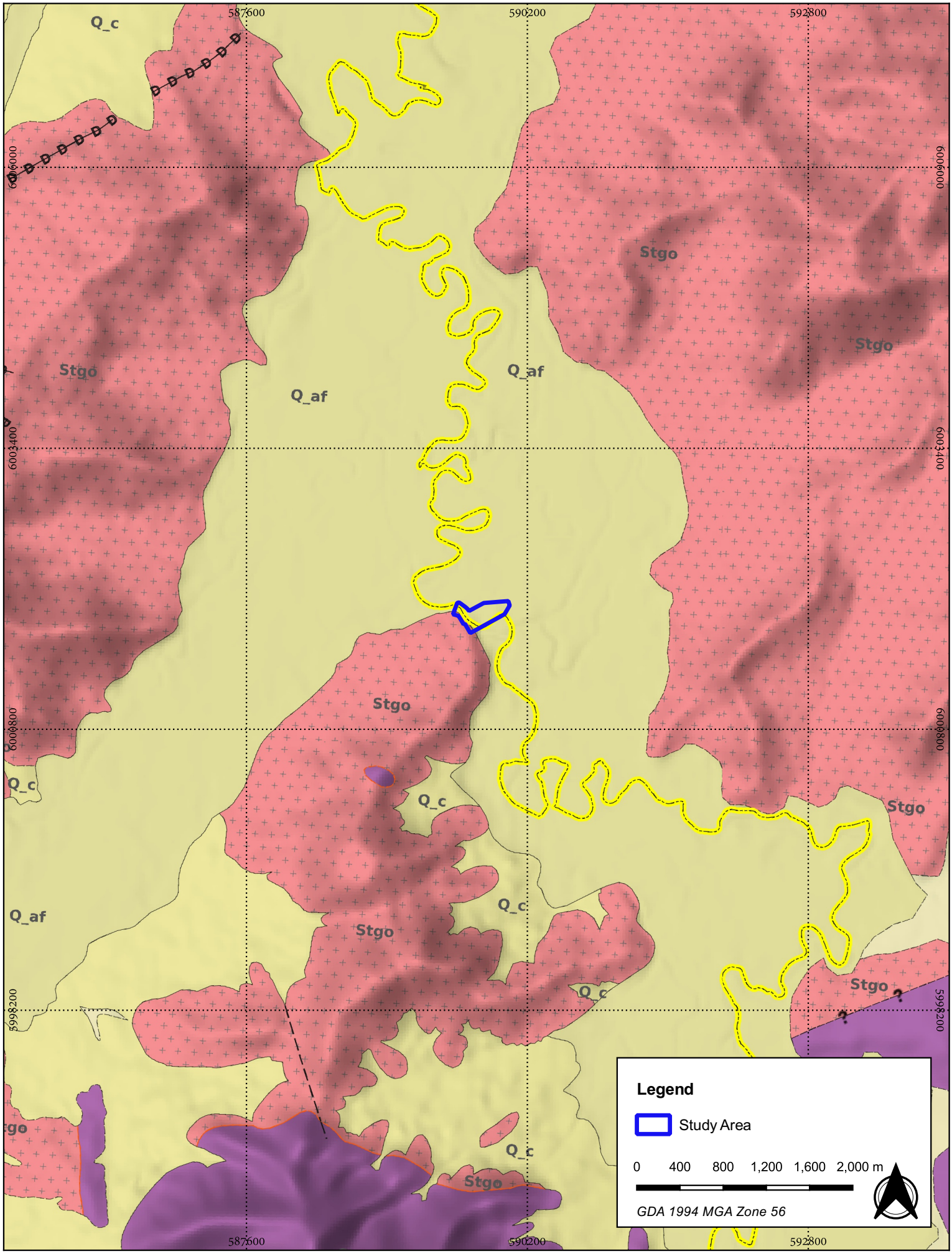

Figure 6 - Geological units identified within the study area

21016 Towong Bridge

Source: NSW LPI Aerial

Drawn by: SS Date: 2021-04-28

AUSTRAL ARCHAEOLOGY

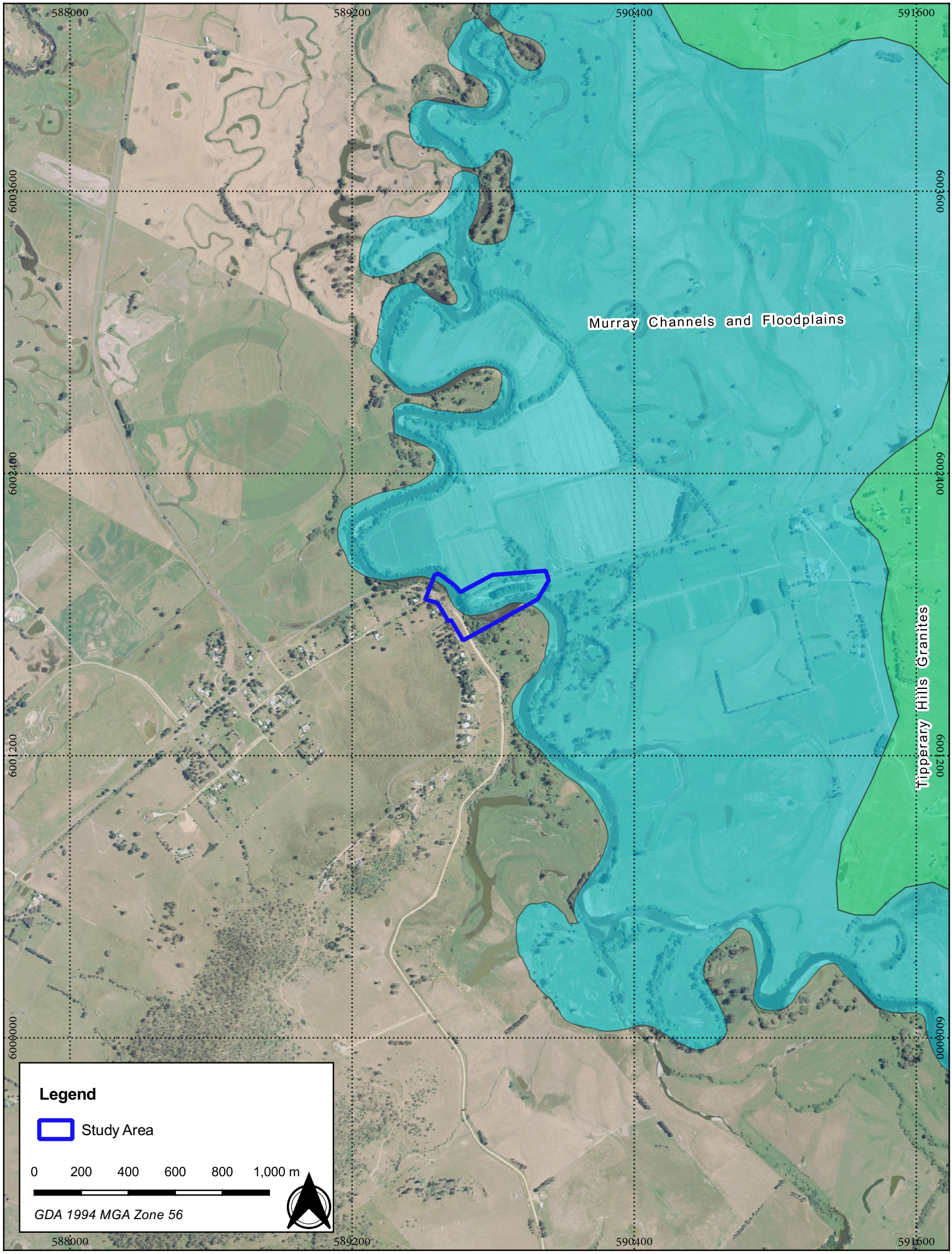

Figure 7 - Mitchell Landscapes identified within the study area

21016 Towong Bridge

Source: NSW LPI Aerial, NSW Spatial Services

Drawn by: SS Date: 2021-04-28

AUSTRAL ARCHAEOLOGY

Appendix G

Operational Noise Impact Assessment

Towong Bridge Replacement REF

Operational noise impact assessment

J103_80021046

Prepared for
TfNSW

9 June 2021

Cardno

Contact Information

Cardno (Qld) Pty Ltd
ABN 57 051 074 992

Level 11
515 St Paul's Terrace
Fortitude Valley QLD 4006
Australia

www.cardno.com
Phone +61 7 3369 9822
Fax +61 7 3369 9722

Document Information

Prepared for	TfNSW
Project Name	Operational noise impact assessment
File Reference	pr_J103_80021046_PL01_DRAFT.docx
Job Reference	J103_80021046
Date	9 June 2021
Version Number	2

Author(s):

Paul Lonard
Senior Acoustic Consultant

Effective Date 9/06/2021

Approved By:

Julie McDonagh
Senior Principal

Date Approved 9/06/2021

Document History

Version	Effective Date	Description of Revision	Prepared by	Reviewed by
01	7/05/2021	DRAFT	Paul Lonard	Julie McDonagh
02	9/06/2021	REF	Paul Lonard	Julie McDonagh

© Cardno. Copyright in the whole and every part of this document belongs to Cardno and may not be used, sold, transferred, copied or reproduced in whole or in part in any manner or form or in or on any media to any person other than by agreement with Cardno.

This document is produced by Cardno solely for the benefit and use by the client in accordance with the terms of the engagement. Cardno does not and shall not assume any responsibility or liability whatsoever to any third party arising out of any use or reliance by any third party on the content of this document.

Executive Summary

Transport for NSW (TfNSW) is proposing to replace the existing Towong Bridge in order to provide a safe new river crossing. The Towong Bridge over the Murray River was constructed in 1938, and links Upper Murray Road in Victoria to Towong Road in NSW. It is currently the only active timber beam bridge crossing of the Murray River.

This report supports the environmental assessment for the proposal. The proposal is subject to assessment by a review of environmental factors (REF) under Division 5.1 of Environmental Planning and Assessment Act 1979 (EP&A Act).

As the proposal includes minor amendments to the alignment, this desktop operational noise assessment has been conducted in order to determine whether the proposed works can be classed as minor works in accordance with the relevant policies. On this basis, noise monitoring was not conducted for the project. Should the assessment determine that the project will result in traffic noise levels increasing by more than 2.0 dBA above pre-existing conditions, a further detailed assessment will be required.

Key features of the proposal include:

- Three span bridge structure of overall length of 58 metres (m) along the existing alignment crossing the Murray River
- The Five superstructures consist of five super-T girders in each span made integral at the piers with a cast in-situ reinforced concrete deck slab.
- Spill through abutments with reinforced concrete headstocks
- Bridge traffic barriers
- Walkway of overall width of 1.95 m
- Demolition of existing bridge.

This assessment considers the following policies and guidelines:

- DECCW (Now EPA) Road Noise Policy (DECCW 2011) (RNP)
- Roads and Maritime (Now TfNSW) At-Receiver Noise Treatment Guideline (Draft) (Roads and Maritime 2017) (ARNTG)
- Roads and Maritime (Now TfNSW) Noise Criteria Guideline (Roads and Maritime 2015) (NCG)
- Roads and Maritime (Now TfNSW) Noise Mitigation Guideline (Roads and Maritime 2015) (NMG)
- Roads and Maritime (Now TfNSW) Noise Model Validation Guideline (Roads and Maritime 2018) (NMVG)
- RTA (Now TfNSW) Environmental Noise Management Manual (RTA 2001) (ENMM)
- Roads and Maritime (Now TfNSW) Construction Noise and Vibration Guideline (Roads and Maritime 2016) (CNVG)
- Vicroads Transport Noise Reduction Policy (Vicroads 2005)

On this basis, the assessment has identified the following conclusions:

Assessment conclusions and recommendations

The assessment of road traffic noise was conducted in accordance with the NSW RNP and NCG. The assessment of current and future traffic conditions has resulted in the following conclusions:

- The predicted traffic noise levels in the year of opening are not predicted to exceed pre-existing traffic noise levels by more than 2 dBA. This is predominately due to the horizontal distance between the residents and the new traffic alignment not decreasing significantly.
- Replacement of the bridge will create minor alterations to road geometry, including horizontal and vertical alignment and the addition of a lane (from 1 lane to 2 lanes). It is assumed the project will not increase traffic volumes or result in significant changes to vehicle speeds on Towong Road.
- Measurements of traffic noise and traffic counts for Towong Road have not been conducted for the assessment. As it is predicted that the project will not increase traffic noise levels by more than 2.0 dBA, the project can be classified as minor works in accordance with the NCG. Therefore, traffic noise monitoring should not be required.

- A review of audio from a vehicle traversing Towong Bridge indicates that noise is created by rattling of the wooden bridge structure. This noise source will become non-existent with a concrete bridge structure, provided any expansion joints are adequately treated to ensure noise is not created by the tyre/expansion joint interaction.
- Traffic noise impacts are predicted to comply with the VTNRP criteria. This is predominately due to low traffic volumes on Towong Road and Brooke Street.

Table of Contents

	Assessment conclusions and recommendations		iii
1	Introduction		1
	1.1	Proposal Identification	1
	1.2	Purpose of the report	3
2	Methodology		4
	2.1	Investigation study area	4
	2.2	Noise sensitive receivers	4
3	Road Traffic Noise Criteria		5
	3.1	NSW Road Noise Policy 2011 (NSW RNP)	5
	3.2	Vicroads Traffic Noise Reduction Policy 2005	8
4	Design Objectives		9
	4.1	New South Wales Design Objectives	9
	4.2	Victorian Design Objectives	9
5	Predicted operational road traffic noise impacts		10
	5.1	General operational noise modelling methodology	10
	5.2	Traffic volumes	11
	5.3	Modelled scenarios	11
	5.4	Model verification	11
	5.5	Predicted Road Traffic Noise Levels	12
6	Recommendations		15
7	Conclusion		16

Appendices

Appendix A Noise Maps

Tables

Table 3-1	Assessed roads - functional class	5
Table 3-2	NSW RNP road traffic noise assessment criteria for residential land uses	6
Table 3-3	Relative increase criteria for residential land uses	7
Table 5-1	Road traffic noise modelling inputs and assumptions	10
Table 5-2	Predicted traffic volumes	11
Table 5-3	Modelled scenarios	11
Table 5-4	Predicted Road Traffic Noise Levels – NSW Assessment	12
Table 5-5	Predicted Road Traffic Noise Levels – Victorian Assessment	13

Figures

Figure 1-1 Site Aerial Photo 1
Figure 1-2 View of the existing bridge from the NSW side facing south-west to the Victorian side. 2
Figure 1-3 View of the existing bridge from the Victorian side facing north-east to the NSW side. 2
Figure 7-1 Predicted Traffic Noise Levels – Pre-Existing Traffic Condition - Daytime 1
Figure 7-2 Predicted Traffic Noise Levels – With Project - Daytime 2
Figure 7-3 Predicted Traffic Noise Levels – Predicted Noise Level Increase - Daytime 3
Figure 7-4 Predicted Traffic Noise Levels – Pre-Existing Traffic Condition – Night-time 4
Figure 7-5 Predicted Traffic Noise Levels – With Project – Night-time 5
Figure 7-6 Predicted Traffic Noise Levels – Predicted Noise Level Increase – Night-time 6
Figure 7-7 Predicted Traffic Noise Levels – Pre-Existing Traffic Condition – LA10, 18h 7
Figure 7-8 Predicted Traffic Noise Levels – With Project – LA10, 18h 8
Figure 7-9 Predicted Traffic Noise Levels – Predicted Noise Level Increase – LA10, 18h 9

1 Introduction

1.1 Proposal Identification

The Towong Bridge over the Murray River was constructed in 1938, and links Upper Murray Road in Victoria to Towong Road in NSW. It is currently the only active timber beam bridge crossing of the Murray River.

The existing bridge is located within a rural environment within a scenic section of the Murray River, and is listed on *Tumbarumba Local Environmental Plan 2010* (Tumbarumba LEP) as an item of local significance.

The proposed concept design option entails the replacement of the existing bridge with a new bridge on the same alignment to provide a safe new river crossing, offering an equivalent or better standard of service than existing.

Key features of the proposal would include:

- Three span bridge structure of overall length of 58 metres (m) along the existing alignment crossing the Murray River
- The Five superstructures consist of five super-T girders in each span made integral at the piers with a cast in-situ reinforced concrete deck slab.
- Spill through abutments with reinforced concrete headstocks
- Bridge traffic barriers
- Walkway of overall width of 1.95 m
- Demolition of existing bridge.

An aerial photo of the proposal is provided in Figure 1-1. Views of the proposal site and existing bridge are shown in Figure 1-2 and Figure 1-3.

Figure 1-1 Site Aerial Photo

Figure 1-2 View of the existing bridge from the NSW side facing south-west to the Victorian side.

Figure 1-3 View of the existing bridge from the Victorian side facing north-east to the NSW side.

1.2 Purpose of the report

This operational noise impact assessment has been prepared by Cardno on behalf of Transport for NSW. For the purposes of these works, Transport for NSW is the proponent and the determining authority under Division 5.1 of the EP&A Act.

The purpose of the operational noise impact assessment is to undertake the following:

- Determination of assessment objectives in accordance with the relevant policies and guidelines.
- An assessment of potential operational noise impacts from the proposal. The assessment shall determine whether the proposal will increase traffic noise impacts by more than 2.0 dBA. If so, a further detailed assessment will be required.

2 Methodology

2.1 Investigation study area

The operational noise study area was determined in accordance with the Roads and Maritime Noise Criteria Guideline (NCG) (Roads and Maritime, 2015). The study area primarily consists of rural land and residential locations as detailed in Section 2.2.1.

The assessed subject roads include Towong Road, which changes to Brookes Street south of Towong Bridge.

The adopted operational noise study area includes all sensitive receivers located within 600 metres of the centreline of the outermost lanes of the proposal.

2.2 Noise sensitive receivers

The sensitive receivers located near to the project can be grouped into residential and non-residential noise sensitive receivers as follows:

2.2.1 Residential receivers

All of the potentially affected residential properties are located to the west of Towong Bridge, and within the state of Victoria.

There are no noise sensitive residential uses adjacent to the project within NSW. On this basis, a review of NSW and Victorian legislation will be included in the assessment.

2.2.2 Non-residential noise sensitive properties

There are no non-residential noise sensitive receiver locations within the study area.

3 Road Traffic Noise Criteria

3.1 NSW Road Noise Policy 2011 (NSW RNP)

The NSW Road Noise Policy (DECCW, July 2011) (NSW RNP) provides definitions of the functional class of the road under consideration. Table 3-1 outlines the roads under assessment and their functional class. For the purposes of adoption of assessment criteria from the NSW RNP, the Roads and Maritime Noise Criteria Guideline (NCG) (Roads and Maritime, 2015) states that collector roads are classed as sub-arterial roads.

Table 3-1 Assessed roads - functional class

Road	Road section	Functional class
Towong Road	Brooke Street-Tooma Road	Sub-Arterial

3.1.2 Roads and Maritime Noise Criteria Guideline (NCG)

Noise criteria are assigned to sensitive receivers using the NCG. The NCG provides guidance on how to apply the NSW RNP.

As defined in the NCG, the study area extends to where noise levels are dominated by other roads that are not being assessed as part of the proposal. This is up to a maximum distance of 600 metres from the project works for urban areas.

Residences may be assigned new, redeveloped, transition zone or relative increase criteria depending on how the project would influence noise levels. For each facade of the sensitive receiver, the most stringent applicable criteria will be used in the assessment.

The target criteria are based on a receiver's relative exposure to new or redeveloped road segments. In some instances, residences may be exposed to noise from new and redeveloped roads or different functional classes. In this instance the proportion of noise from each road is used to establish transition zone criteria and provides a smooth change in noise criteria between adjacent residences. A further check is made to prevent large increases above the existing traffic noise levels using the relative increase criteria.

A road is defined as 'new' where the road is a bypass or has been substantially realigned (outside the NCG tolerance band and/or existing grade). However, consideration can be given to whether a road has been substantially realigned for distances less than six times the existing lane width using local context for guidance. This is consistent with the NCG.

To address the transition zone between new and redeveloped roads, traffic noise levels must be predicted for four scenarios, including:

1. New project roads only, daytime
2. New project roads only, night time
3. Redeveloped project roads only, day time
4. Redeveloped project roads only, night-time.

Whether or not the noise limit for new or redeveloped roads applies to a receiver, depends upon the relative exposure of the receiver's façade to the new or the redeveloped road.

The redeveloped road criteria are 5 dBA higher than the new road criteria, however, a receiver location with relatively equal exposure to both new and redeveloped roads will have target noise level between the higher and lower of the two noise limits.

The proposal consists of redeveloped road segments and does not contain any new road segments. Therefore, the resulting criteria will be the more stringent of the redeveloped road criteria or the relative increase criteria.

Minor Works

TfNSW applies existing road criteria (RNP Table 8) where the minor works increase noise levels by more than 2.0 dBA relative to the existing noise levels at the worst affected receiver (NCG Principle 1, 2, and 3, page 4). The noise catchment area should include all receivers where noise levels increase. A 600 metre noise catchment may not be required. Transition zones are not applicable to minor works.

Target criteria - residential sensitive receivers

The applicable NCG criteria for residential receivers located near to arterial and sub-arterial roads are shown in Table 3-2.

Table 3-2 NSW RNP road traffic noise assessment criteria for residential land uses

Road category	Type of project/land use	Assessment criteria dBA	
		Day (7am 10pm)	Night (10pm 7am)
Freeway/ arterial/ sub-arterial roads	1. Existing residences* affected by noise from new freeway/arterial/sub-arterial road corridors	$L_{Aeq, (15\ hour)}$ 55 (external)	$L_{Aeq, (9\ hour)}$ 50 (external)
	2. Existing residences* affected by noise from redevelopment of existing freeway/arterial/sub-arterial roads	$L_{Aeq, (15\ hour)}$ 60 (external)	$L_{Aeq, (9\ hour)}$ 55 (external)
	3. Existing residences affected by noise from a transition zone between new and redeveloped roads	$L_{Aeq, (15\ hour)}$ 55 - 60 (external)	$L_{Aeq, (9\ hour)}$ 50 - 55 (external)
Local Roads	4. Existing residences affected by noise from new local road corridors 5. Existing residences affected by noise from redevelopment of existing local roads 6. Existing residences affected by additional traffic on existing local roads generated by land use developments	$L_{Aeq, (1\ hour)}$55 (external)	$L_{Aeq, (1\ hour)}$ 50 (external)

Relative increase criteria

In addition to the assessment criteria outlined in Section , any increase in the total traffic noise level at a location due to a proposed project or traffic-generating development is required to be considered.

The NCG also states that residences experiencing increases in total traffic noise level above the relative increase criteria shown below in Table 3-3 should also be considered for mitigation. For road projects where the main subject road is a local road, the relative increase criterion does not apply.

Table 3-3 Relative increase criteria for residential land uses

Road category	Type of project/land use	Total Traffic Noise Level Increase dBA	
		Day (7am 10pm)	Night (10pm 7am)
Freeway/arterial/ sub-arterial roads and transit ways	New road corridor/redevelopment of existing road/land use development with the potential to generate additional traffic on existing road	Existing $L_{Aeq, (15\ hour)}$ + 12 dBA (external)	Existing $L_{Aeq, (9\ hour)}$ + 12 dBA (external)

In Table 3-3 above, the 'existing' traffic noise level refers to the level from all road categories which would occur for the relevant 'no build' option. Where the existing LAeq, (period) road traffic noise level is found to be less than 30 dBA, it is deemed to be 30 dBA.

3.1.3 Roads and Maritime Noise Mitigation Guideline

The Roads and Maritime Noise Mitigation Guideline (Roads and Maritime, 2015) (NMG) outlines the applicable methodology for the determination of mitigation measures requirements. Noise mitigation options that should be considered are listed in order of preference below:

1. Quieter pavement surfaces
2. Noise mounds
3. Noise walls
4. At property treatments.

The NMG provides three triggers where a receiver may qualify for consideration of noise mitigation (beyond the adoption of road design and traffic management measures), as follows:

Trigger 1: The predicted road traffic noise level with the project exceeds the NCG controlling criterion and the noise level increase due to the project (i.e. the noise predictions for the Build minus the No Build) is greater than 2 dBA.

Trigger 2: The predicted road traffic noise level with the project is 5 dBA or more above the NCG criteria (exceeds the cumulative limit) and the receiver is significantly influenced by project road noise, regardless of the contribution from the project.

Trigger 3: The noise level contribution from the road project is acute (daytime LAeq,15hr 65 dB or higher, or night-time LAeq,9hr 60 dB or higher). It qualifies for consideration of noise mitigation even if noise levels are dominated by another road.

The eligibility of receivers for consideration of additional noise mitigation is determined before the benefit of additional noise mitigation (quieter pavement and noise barriers) is included. The requirement for the project is to provide reasonable and feasible additional mitigation for these eligible receivers to meet the NCG controlling criterion. If the NCG criterion cannot be satisfied with quieter pavement and noise barriers, then the receiver is eligible for consideration of at-property treatment.

3.1.4 Maximum pass-by event noise criteria

The maximum pass-by event criteria is provided within the Roads and Traffic Authority's Environmental Noise Measurement Manual (RTA, 2001) (ENMM). Practice note iii in the ENMM states the following in relation to the assessment of maximum noise levels:

"This maximum noise assessment should be used as a tool to help prioritise and rank mitigation strategies, but should not be applied as a decisive criterion in itself."

In terms of the noise limits to be assessed, the ENMM provides the following:

- *Maximum internal noise levels below 50–55 dB(A) are unlikely to cause awakening reactions, and*
- *One or two noise events per night with maximum internal noise levels of 65–70 dB(A) are not likely to significantly affect health and wellbeing.*

At locations where road traffic is continuous rather than intermittent, the Leq(9hr) (night) target noise levels should sufficiently account for sleep disturbance impacts. However, where the emergence of Lmax over the ambient Leq is equal to or greater than 15 dB(A), the Leq(9hr) criteria may not sufficiently account for sleep disturbance impacts.

A "maximum noise event" can therefore be defined as any pass-by for which

$$L_{max} - L_{eq(1hr)} \geq 15 \text{ dB(A)}.$$

Given that it is not expected that night-time traffic on the local road network will consist of continuous traffic flows, the predicted traffic noise impacts have been assessed against the ambient Leq level.

3.2 Vicroads Traffic Noise Reduction Policy 2005

The *Vicroads traffic noise reduction policy* (VTNRP) (Vicroads 2005) establishes the traffic noise criteria for new road projects within Victoria. Although the project is located with NSW, the noise sensitive receivers are located with Victoria, therefore an assessment against the criteria from the VTNRP has been undertaken for information purposes. The VTNRP specifies the following traffic noise limits:

- *A limit of 63dBA applies to new arterial roads and freeways if the noise level had been less 63 dBA before the road was built. However if the noise level was 63 dBA or more, (e.g. from local roads), a noise increase of 2dBA is allowed.*
- *A limit of 63dBA applies to arterial roads and freeways where two lanes are added AND buildings which previously provided shielding from traffic noise are removed.*

VicRoads will also consider limiting the increase in traffic noise due to a new road to no more than 12dBA where the pre-existing noise level is less than 50 dBA.

4 Design Objectives

4.1 New South Wales Design Objectives

Based on the requirements of the NSW NCG, this assessment will determine whether the project can be classified as minor works (i.e. traffic noise levels will not increase by more than + 2.0 dBA as a result of the project. If noise levels are found to increase by more than 2.0 dBA in the year the project opens, a further detailed assessment would be required to demonstrate compliance with the criteria presented in Section 3.1. If the project will not increase traffic noise impacts, no further acoustic treatments will be required.

4.2 Victorian Design Objectives

The applicable Victorian noise limits for the project are as follows:

> 63 dBA L10, 18h

> Existing L10, 18h +12 dBA where the existing traffic noise level is less than 50 dBA L10, 18h.

5 Predicted operational road traffic noise impacts

5.1 General operational noise modelling methodology

Noise modelling was undertaken using SoundPLAN 8.2 using a digital terrain model calculated from existing ground levels provided by LiDAR. SoundPLAN calculates road traffic noise levels based on the Calculation of Road Traffic Noise (CoRTN, UK Department of Transport, Welsh Division 1988) assessment methodology algorithms.

The predicted results were used as the basis to produce noise prediction scenarios at all potentially affected receivers for the years 2023 (year of opening), both with and without the proposal in order to determine if the project will increase traffic noise impact by more than 2.0 dBA.

Noise prediction models were based upon the traffic volumes detailed in Section 5.2 and Table 5-1 details the sources of information used for the prediction of traffic noise levels.

Table 5-1 Road traffic noise modelling inputs and assumptions

Input parameter	Source reference
Ground elevation geometry	LiDAR contours at 1 metre intervals provided by Cardno GIS personnel.
Road Alignment	Existing: LiDAR contours and georeferenced Nearmap aerial photos Future: Proposed design alignment provided by the Cardno design team.
Traffic volumes	Refer to Section 5.2
Percentage of Heavy Vehicles	Refer to Section 5.2
Source Heights & Corrections	The noise model assumes three sources heights: • Light vehicles at 0.5 metres with 0 dB correction • Heavy vehicles at 1.5 metres with a -0.6 dB correction • Heavy Vehicles at 3.6 metres with a -8.6 dB correction.
Road traffic speeds	• The existing speed limit is open, however speeds on the existing and proposed bridge are modelled with a speed of 50 km/h, transitioning to the open speed limit of 100 km/h
Road Surface	The assessment assumes Dense Graded Asphalt (DGA).
Road Surface Corrections	• 0 dB correction for DGA • +4 dB correction was added for 14 mm chip seal. (applied correction factor representative of acoustic performance relative to DGA).
Ground Absorption	• 75 per cent soft ground for grass, wooded areas and park land • 50 per cent soft ground for residential/suburban land use • 25 per cent soft ground for commercial and industrial land uses
Façade correction	+ 2.5 dBA

5.2 Traffic volumes

A current traffic volume of approximately 100 vpd was advised by TfNSW, with approximately 50% heavy vehicles. To determine 15 and 9-hour traffic volumes to correlate with calculating $L_{Aeq\ 15hr}$ and $L_{Aeq\ 9hr}$ noise levels, it was assumed 80% of the traffic would traverse Towong during the day period and 20% during the night period. Predicted traffic volumes are provided for the locations shown in Table 5-2.

Table 5-2 Predicted traffic volumes

Road	Vehicles per 15 hour (Day, 7am 10pm)		Vehicles per 9 hour (Night, 10pm 7am)		Vehicles per 18 hour (6am 12am)	
	Cars	Heavy vehicles	Cars	Heavy vehicles	Cars	Heavy vehicles
Year of Opening						
Towong Road/Brooke Street	40	40	10	10	44	44

5.3 Modelled scenarios

Modelled traffic noise scenarios are provided in accordance with the NCG requirements. The modelled scenarios provided in this assessment are therefore as follows.

Table 5-3 Modelled scenarios

Scenario	Year	Name	Description
1	2023	No build - year of opening	Predicted no build 2023 traffic volumes and pre-existing road alignments (i.e year 2023 model if the proposal were not to go ahead)
2	2023	Build - year of opening	Predicted 2023 traffic volumes with the proposed alignment

Note:

1. All modelled traffic scenarios included iterations for both the day period ($L_{Aeq,\ 15h}$) and the night period ($L_{Aeq,\ 9h}$) and an additional prediction of the LA10, 18h for the assessment against the Victorian design objectives.

5.4 Model verification

As noise monitoring has not been undertaken for the project, verification of the model has not been conducted.

5.5 Predicted Road Traffic Noise Levels

Modelled traffic noise levels for both the day period (LAeq, 15hr) and the night period (LAeq, 9hr) are presented in Table 5-4, with the assessment against Victorian requirements presented in Table 5-5. Noise predictions in the form of noise contour maps are presented in Appendix A.

Table 5-4 Predicted Road Traffic Noise Levels – NSW Assessment

Receiver	Floor	Façade	Scenario 1 Predicted Traffic Noise Level No Project		Scenario 1 Predicted Traffic Noise Level With Project		Predicted Noise Level Increase		Qualifies as Minor Works?
			Day L_{eq}, 15h	Night, L_{eq}, 9h	Day L_{eq}, 15h	Night, L_{eq}, 9h	Day	Night	
2 Sullivan St	GF	NW	49.7	47.2	49.7	47.2	0	0	Yes
2 Sullivan St	F 1	NW	50.7	48.1	50.7	48.1	0	0	Yes
2 Sullivan St	GF	NE	48.2	45.7	48.2	45.7	0	0	Yes
2 Sullivan St	F 1	NE	49.5	47.0	49.5	47.0	0	0	Yes
2 Sullivan St	GF	SE	33.6	31.0	33.6	31.0	0	0	Yes
2 Sullivan St	F 1	SE	36.9	34.3	36.9	34.4	0	-0.1	Yes
6 Sullivan St	GF	NW	44.0	41.5	44.0	41.5	0	0	Yes
6 Sullivan St	GF	NE	44.4	41.8	44.5	42.0	-0.1	-0.2	Yes
6 Sullivan St	GF	SE	39.4	36.8	39.4	36.9	0	-0.1	Yes
13 Sullivan St	GF	E	37.3	34.7	37.3	34.7	0	0	Yes
13 Sullivan St	GF	N	38.3	35.7	38.4	35.9	-0.1	-0.2	Yes
13 Sullivan St	GF	W	31.9	29.4	31.9	29.4	0	0	Yes
15 Sullivan St	GF	SW	30.5	27.9	30.5	27.9	0	0	Yes
15 Sullivan St	GF	NE	36.7	34.1	36.7	34.2	0	-0.1	Yes
15 Sullivan St	GF	NW	37.0	34.4	37.0	34.5	0	-0.1	Yes
17 Sullivan St	GF	SE	32.7	30.2	32.7	30.2	0	0	Yes
17 Sullivan St	GF	NE	36.0	33.4	36.2	33.6	-0.2	-0.2	Yes
17 Sullivan St	GF	NW	33.4	30.9	33.5	30.9	-0.1	0	Yes
19 Sullivan St	GF	NE	35.2	32.6	35.2	32.6	0	0	Yes
19 Sullivan St	GF	NW	34.1	31.6	34.2	31.6	-0.1	0	Yes
21 Sullivan St	GF	E	33.2	30.6	33.2	30.6	0	0	Yes
21 Sullivan St	GF	W	29.5	26.9	29.5	26.9	0	0	Yes
21 Sullivan St	GF	N	34.7	32.1	34.7	32.1	0	0	Yes
22 Brooke St	GF	NE	42.5	40.0	42.5	40.0	0	0	Yes
22 Brooke St	GF	NW	46.4	43.9	46.4	43.9	0	0	Yes
23 Sullivan St	GF	E	31.9	29.3	31.9	29.3	0	0	Yes
23 Sullivan St	GF	W	29.9	27.3	29.8	27.3	0.1	0	Yes
23 Sullivan St	GF	N	33.7	31.2	33.7	31.2	0	0	Yes
25 Sullivan St	GF	E	32.4	29.9	32.4	29.9	0	0	Yes
25 Sullivan St	GF	W	29.6	27.0	29.6	27.0	0	0	Yes
27 Sullivan St	GF	E	30.7	28.2	30.7	28.2	0	0	Yes
27 Sullivan St	GF	W	29.4	26.8	29.3	26.8	0.1	0	Yes
27 Sullivan St	GF	N	32.2	29.6	32.2	29.6	0	0	Yes
29 Sullivan St	GF	N	33.0	30.4	33.0	30.4	0	0	Yes
31 Macadam St	GF	NW	42.7	40.2	42.7	40.2	0	0	Yes

Receiver	Floor	Façade	Scenario 1 Predicted Traffic Noise Level No Project		Scenario 1 Predicted Traffic Noise Level With Project		Predicted Noise Level Increase		Qualifies as Minor Works?
			Day L_{eq}, 15h	Night, L_{eq}, 9h	Day L_{eq}, 15h	Night, L_{eq}, 9h	Day	Night	
31 Macadam St	F 1	NW	43.5	40.9	43.5	40.9	0	0	Yes
31 Macadam St	GF	NE	38.4	35.8	38.4	35.8	0	0	Yes
31 Macadam St	F 1	NE	39.4	36.9	39.4	36.9	0	0	Yes
31 Sullivan St	GF	N	32.2	29.6	32.2	29.6	0	0	Yes
33 Sullivan St	GF	N	31.8	29.3	31.9	29.3	-0.1	0	Yes
40 Macadam St	GF	NW	39.9	37.3	39.9	37.3	0	0	Yes
40 Macadam St	F 1	NW	40.7	38.1	40.7	38.1	0	0	Yes
40 Macadam St	GF	NE	37.4	34.8	37.4	34.8	0	0	Yes
40 Macadam St	F 1	NE	38.2	35.7	38.2	35.7	0	0	Yes

Based on comparison of the predicted noise levels for Scenario 1 and 2, the project is not predicted to increase traffic noise impact by more than 2.0 dBA, In accordance with the NCG, the project would be classified as minor works.

Table 5-5 Predicted Road Traffic Noise Levels – Victorian Assessment

Receiver	Floor	Facade	Predicted Traffic Noise Level L10(18h) dB(A)		Criteria	Complies?
			Scenario 1	Scenario 2		
2 Sullivan St	GF	NW	53	53	63	Yes
2 Sullivan St	F 1	NW	53	53	63	Yes
2 Sullivan St	GF	NE	51	51	63	Yes
2 Sullivan St	F 1	NE	52	52	63	Yes
2 Sullivan St	GF	SE	36	36	48	Yes
2 Sullivan St	F 1	SE	40	40	52	Yes
6 Sullivan St	GF	NW	47	47	59	Yes
6 Sullivan St	GF	NE	47	47	59	Yes
6 Sullivan St	GF	SE	42	42	54	Yes
13 Sullivan St	GF	E	40	40	52	Yes
13 Sullivan St	GF	N	41	41	53	Yes
13 Sullivan St	GF	W	35	35	47	Yes
15 Sullivan St	GF	SW	33	33	45	Yes
15 Sullivan St	GF	NE	39	40	51	Yes
15 Sullivan St	GF	NW	40	40	52	Yes
17 Sullivan St	GF	SE	36	36	48	Yes
17 Sullivan St	GF	NE	39	39	51	Yes
17 Sullivan St	GF	NW	36	36	48	Yes
19 Sullivan St	GF	NE	38	38	50	Yes
19 Sullivan St	GF	NW	37	37	49	Yes
21 Sullivan St	GF	E	36	36	48	Yes

Receiver	Floor	Facade	Predicted Traffic Noise Level L10(18h) dB(A)		Criteria	Complies?
			Scenario 1	Scenario 2		
21 Sullivan St	GF	W	32	32	44	Yes
21 Sullivan St	GF	N	37	37	49	Yes
22 Brooke St	GF	NE	45	45	57	Yes
22 Brooke St	GF	NW	49	49	61	Yes
23 Sullivan St	GF	E	35	35	47	Yes
23 Sullivan St	GF	W	33	33	45	Yes
23 Sullivan St	GF	N	37	37	49	Yes
25 Sullivan St	GF	E	35	35	47	Yes
25 Sullivan St	GF	W	32	32	44	Yes
27 Sullivan St	GF	E	34	34	46	Yes
27 Sullivan St	GF	W	32	32	44	Yes
27 Sullivan St	GF	N	35	35	47	Yes
29 Sullivan St	GF	N	36	36	48	Yes
31 Macadam St	GF	NW	46	46	58	Yes
31 Macadam St	F 1	NW	46	46	58	Yes
31 Macadam St	GF	NE	41	41	53	Yes
31 Macadam St	F 1	NE	42	42	54	Yes
31 Sullivan St	GF	N	35	35	47	Yes
33 Sullivan St	GF	N	35	35	47	Yes
40 Macadam St	GF	NW	43	43	55	Yes
40 Macadam St	F 1	NW	43	43	55	Yes
40 Macadam St	GF	NE	40	40	52	Yes
40 Macadam St	F 1	NE	41	41	53	Yes

Based on comparison of the predicted noise levels for Scenario 1 and 2, the project is not predicted to increase traffic noise impact by more than 2.0 dBA and is predicted to comply with the VTNRP traffic noise criteria. On this basis, no further mitigation measures are recommended.

6 Recommendations

On the basis the project is not predicted to increase traffic noise impacts by more than 2.0 dBA, in accordance with the NCG the project can be classified as minor works. On this basis no further detailed assessment is required and mitigation measures are not recommended.

Furthermore, the project is predicted to comply with the Victorian operational road traffic noise criteria stipulated within the VTNRP. Therefore no further mitigation measures are recommended.

7 Conclusion

A road traffic noise impact assessment was conducted for the proposed Towong Bridge Replacement project. The findings of the assessment are summarised as follows;

- The predicted traffic noise levels in the year of opening are not predicted to exceed pre-existing traffic noise levels by more than 2 dBA. This is predominately due to the horizontal distance between the residents and the new traffic alignment not decreasing significantly.
- Replacement of the bridge will create minor alterations to road geometry, including horizontal and vertical alignment and the addition of a lane (from 1 lane to 2 lanes). It is assumed the project will not increase traffic volumes or result in significant changes to vehicle speeds on Towong Road.
- Measurements of traffic noise and traffic counts for Towong Road have not been conducted for the assessment. As it is predicted that the project will not increase traffic noise levels by more than 2.0 dBA, the project can be classified as minor works in accordance with the NCG. Therefore, traffic noise monitoring should not be required.
- A review of audio from a vehicle traversing Towong Bridge indicates that noise is created by rattling of the wooden bridge structure. This noise source will become non-existent with a concrete bridge structure, provided any expansion joints are adequately treated to ensure noise is not created by the tyre/expansion joint interaction.
- Traffic noise impacts are predicted to comply with the VTNRP criteria. This is predominately due to low traffic volumes on Towong Road and Brooke Street.

APPENDIX A

NOISE MAPS

Figure 7-1 Predicted Traffic Noise Levels – Pre-Existing Traffic Condition - Daytime

Figure 7-2 Predicted Traffic Noise Levels – With Project - Daytime

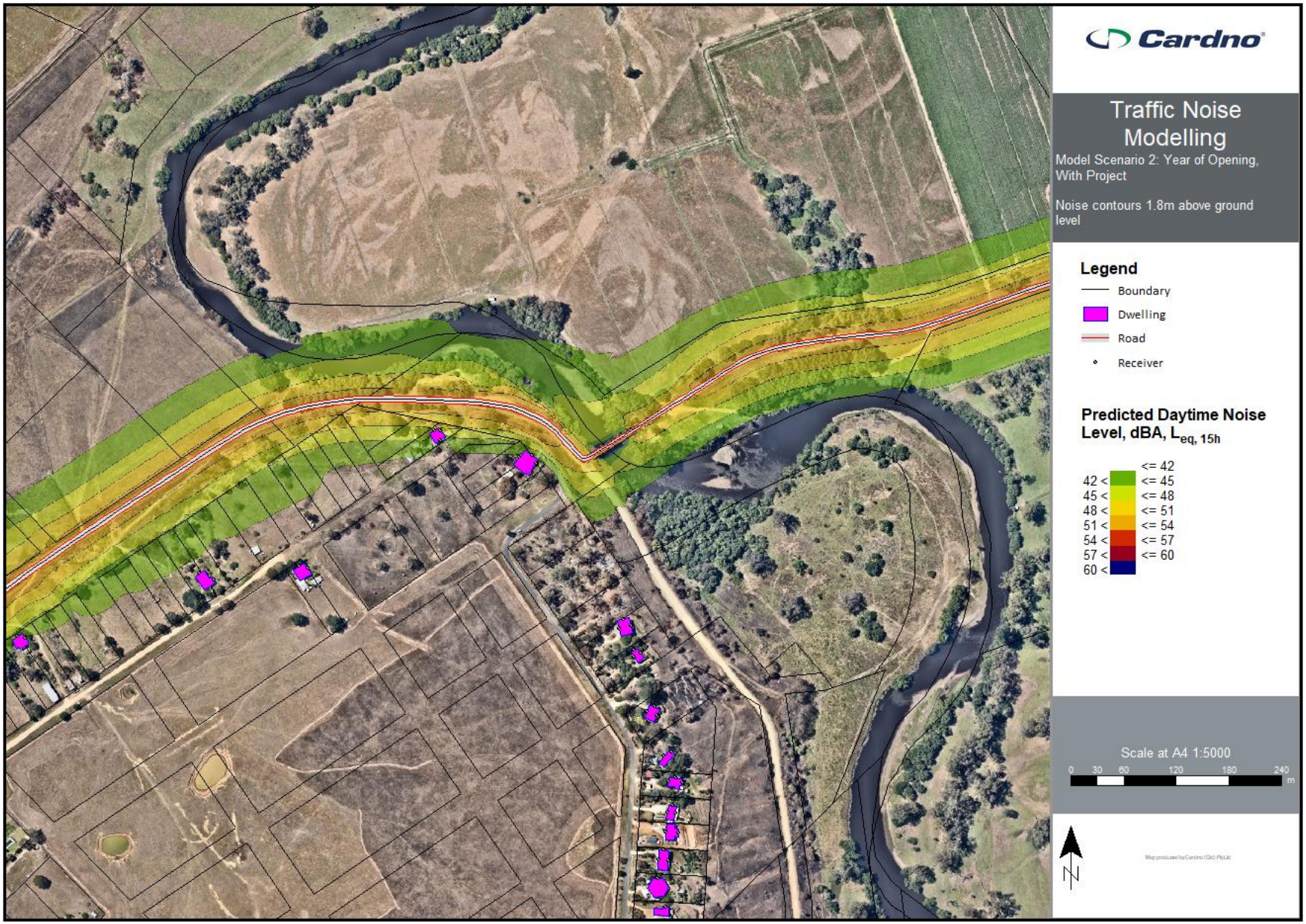

Figure 7-3 Predicted Traffic Noise Levels – Predicted Noise Level Increase - Daytime

Figure 7-4 Predicted Traffic Noise Levels – Pre-Existing Traffic Condition – Night-time

Figure 7-5 Predicted Traffic Noise Levels – With Project – Night-time

Figure 7-6 Predicted Traffic Noise Levels – Predicted Noise Level Increase – Night-time

Figure 7-7 Predicted Traffic Noise Levels – Pre-Existing Traffic Condition – LA10, 18h

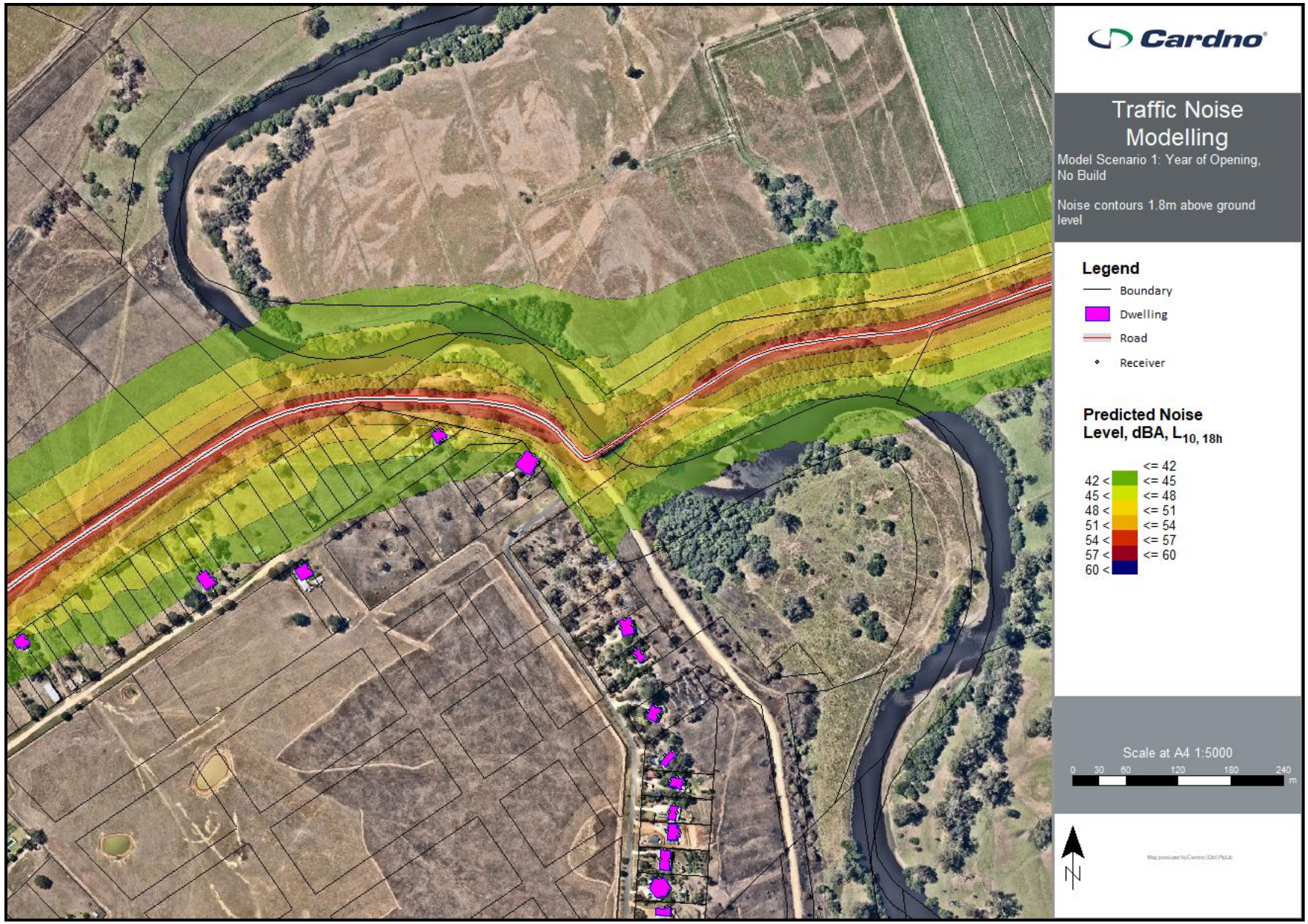

Figure 7-8 Predicted Traffic Noise Levels – With Project – LA10, 18h

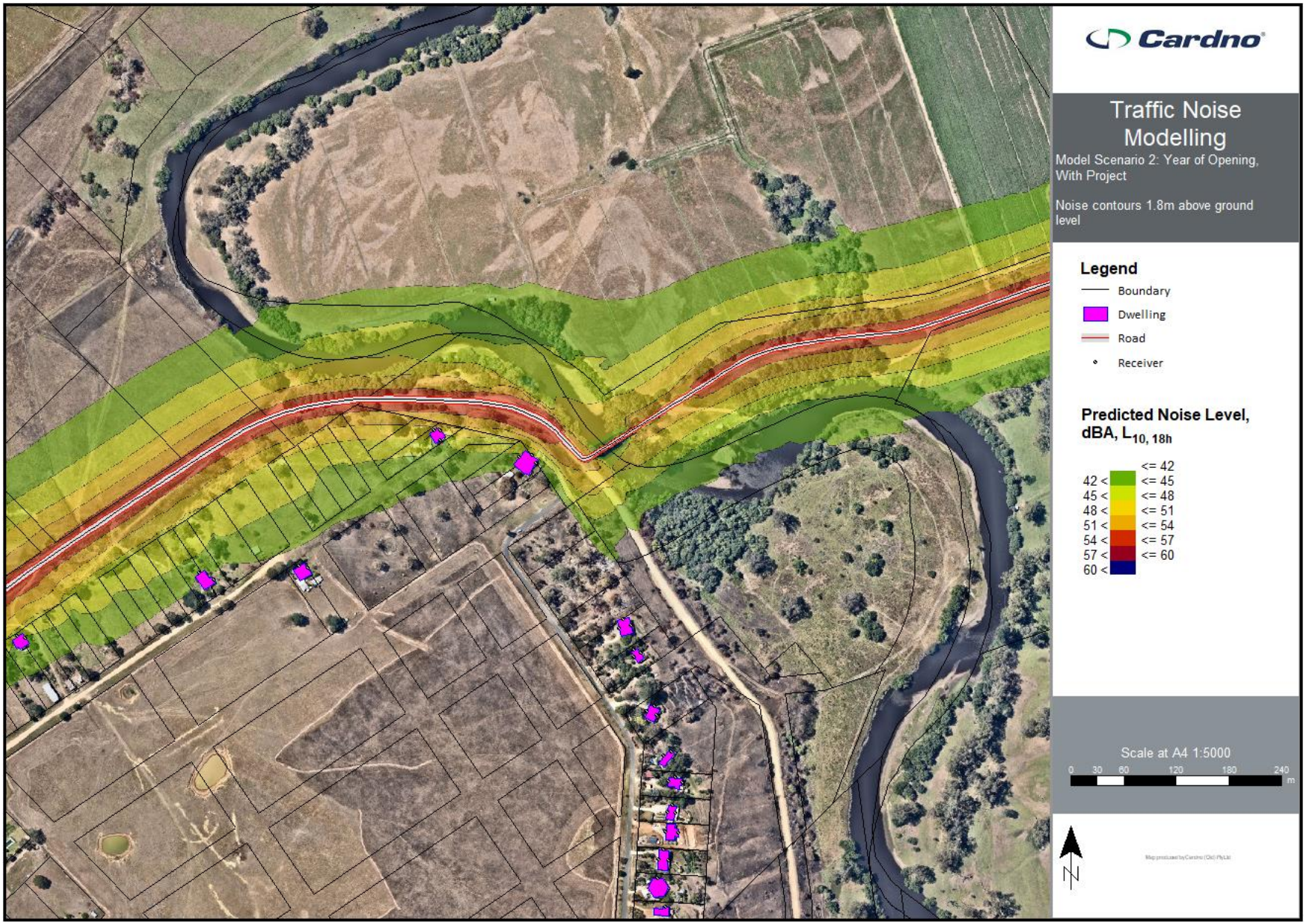

Figure 7-9 Predicted Traffic Noise Levels – Predicted Noise Level Increase – LA10, 18h